2026-10-22

ePS10

DP6153-01h-DI

ePS10

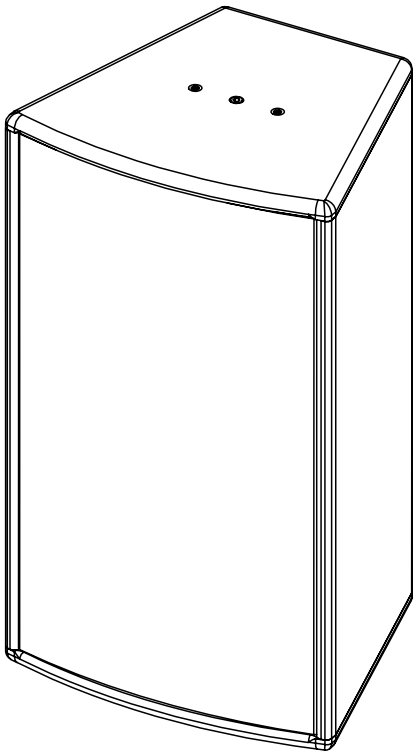

User manual

TÜVNORD
TÜV NORD CERT GmbH
Baumuster geprüft
tuev-nord.de

WARRANTY 5 YEARS WARRANTY

IP55

TABLE OF CONTENTS

TABLE OF CONTENTS 2
WARNINGS 3
EQUIPMENT 4
DESCRIPTION 5
PRESET 6
HF DIRECTIVITY 7
CROSSOVER FREQUENCY 7
ACCESSORIES 8
ARRAY EQ 13
MAINTENANCE 14
TECHNICAL SPECIFICATIONS 16
USER NOTES 17

WARNINGS

PRECAUTIONS

Do not open the speaker, do not try to disassemble it neither to modify it in any way. The system doesn't include any user-repairable part.

If the system seems to be malfunctioning or damaged, stop using it at once and have it repaired by a NEXO qualified technician.

Do not expose the system directly to the sun or to the rain, do not immerse it into fluids, do not place objects filled with liquid on the system. If a liquid gets into the system, please have it inspected by a NEXO qualified technician.

The connection should be performed by qualified technician, by ensuring that power is off.

Operating temperature with temperate climate: 0°C to +40°C (+32°F to +104); -20°C à +60°C (-4°F to +140°F) for storage.

SAFETY INFORMATIONS

Read this manual before using the speaker.

Keep this manual available for further reference.

Observe all warnings and cautions.

Please check the NEXO Web site **nexo-sa.com** to get the most up-to-date version of this manual.

Ensure you are aware of the safety rules applying to rigging, stacking or installing on tripod or speaker stand. Failure to observe these rules may expose persons to potential wounds or even death.

Only use the system with accessories specified by NEXO.

Please always consult a NEXO-accredited technician if the installation needs architectural works and observe following precautions:

Mounting Precautions:

- Please select screws and mounting location supporting 4 times the system weight.
- Do not expose the system to excessive dust, vibrations, to extreme cold or hot temperatures, to reduce the risk of damaging components.
- Do not place the system in an unstable position: it could fall accidentally.
- If the system is used on a tripod, please ensure the tripod's specifications are adapted and that its height does not exceed 1.40m/55". Do not move the tripod with the system in position.

Connection and Powering Precautions:

- Unplug connected cables before moving the system.
- Power off the system before connecting the system.
- When switching on the installation, the amplifier must be powered last; when switching the installation off, shut off the amplifier first.
- If you work by cold temperatures, progressively raise the level to nominal value during the first minutes of use, to allow the system components to stabilize.

Please check regularly the system condition.

HIGH SOUND PRESSURE LEVELS

Exposure to very high sound pressure levels may cause permanent hearing losses. Degrees of hearing losses may be different from one person to another, but almost everybody will be affected if exposed to high sound pressure levels during a long period of time. The OSHA (Occupational Safety and Health Administration) American Agency specified the following maximal exposures:

Number of Hours	Sound Pressure Level (dBA), Slow Response
8	90
6	92
4	95
3	97
2	100
1 ½	102
1	105
½	110
¼ or less	115

WASTE OF ELECTRIC OR ELECTRONIC EQUIPMENT

This symbol on the product or its packaging indicates that this product must not be treated as household waste. Instead, it is your responsibility to hand it over to a designated collection point for the recycling of waste electrical and electronic equipment. By ensuring your waste equipment is recycled, you will help prevent potential negative consequences for the environment and human health, which could appear if this product was not recycled. Recycling helps spare natural resources. For more information about the recycling of this product, please contact your local city office, your household waste disposal service or your reseller.

EQUIPMENT

On each side of the cabinet, two M6 with 80 mm pitch plus one M10 fittings will connect the ePS10 to accessories (VNI-HCPL535, VNU-BUMP, VNU-HBRK535, or eye-bolts).

The back of the speaker is fitted with 3x M6 (70mm pitch) to connect wallmount in both vertical and horizontal positions (VNI-WM02).

2 pairs (In/Out) of 7.62 mm pitch screw terminal blocks. Cables from 0.75 mm2 to 3.31 mm2 (12 to 15 AWG) copper section.

From N° 212966110001 (noir) / 213206110001 (blanc), 2 fast connectors. Permissible cables from 0.2 mm2 to 4 mm2 (12 to 24 AWG).

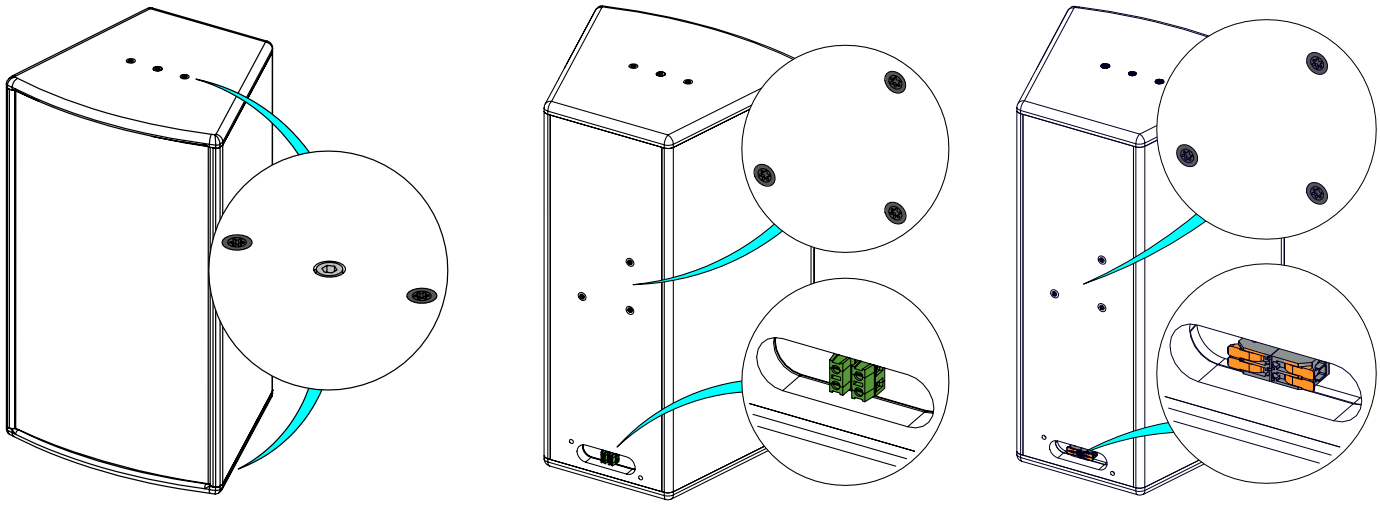

ePS10 with IPCov

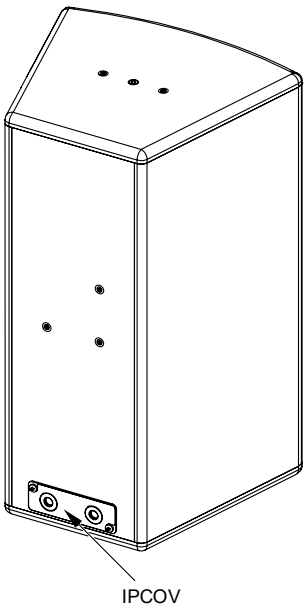

DESCRIPTION

- → The ePS10 is a compact full-range 2 ways speaker
- → Asymmetrical HF dispersion “PS” type.
- → ePS10 can be used alone or with eLS400 or eLS600 subwoofer
- → The speaker is equipped with 2 pairs (In/Out) of screw terminal blocks or fast connectors, permissible cables from 0.75 mm^2 to 3.31 mm^2
  (12 to 15 AWG) copper section. Cable with maximum outside diameter of 11mm.

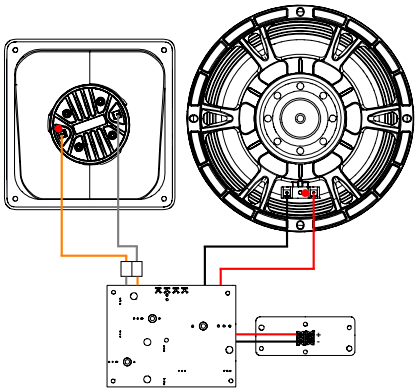

- → To wire ePS10, slit the membrane of the grommet crosswise, pass the cable through and make the connection to the screw terminals. Place the IPCOV.
- → From N° 212966110001 (noir) / 213206110001 (blanc), slit the membrane of the grommet crosswise, pass the cable through and make the connection to the fast connectors. Permissible cables from 0.2 mm2 to 4 mm2 (12 to 24 AWG). Place the IPCOV

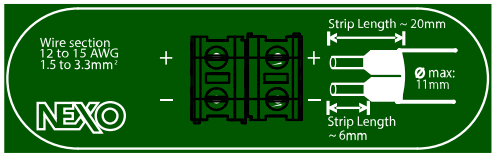

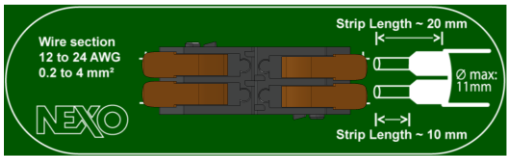

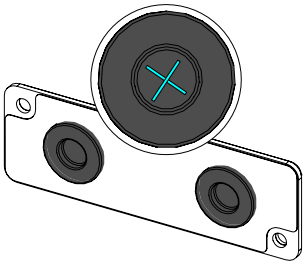

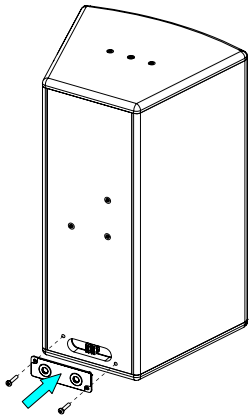

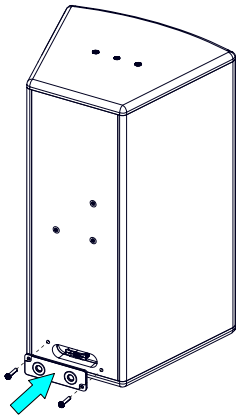

- → IP55: be careful to place the IPCOV correctly.
- → Amplification
  - The ePS10 speakers must be used with a NEXO processor to handle EQ, phase alignment, crossover and excursion/thermal protection for the system loudspeaker.
  - The following table shows the number of ePS10 speakers and eLS600 or eLS18 subwoofers usable with each solution.

	nanoNXAMP4	DTD + DTDAMP4X0.7	DTD + DTDAMP4X1.3
ePS10	1 per channel	1 per bridged channels	Up to 2 per channel
eLS600			1 per channel
eLS18		1 per bridged channels	1 per bridged channels

	microNXAMP4X1	NXAMP4X1mk2	NXAMP4X2mk2	NXAMP4X4mk2
ePS10	Up to 3 per channel	Up to 4 per channel *	Up to 4 per channel	Up to 4 per channel
eLS600	1 per channel	1 per channel *	Up to 2 per channel	Up to 2 per channel
eLS18	1 per bridged channels	Up to 2 per bridged channels	1 per channel *	Up to 4 per channel

* Recommended powering solution

PRESET

Please consult nexo-sa.com for NEXO TD Controllers firmware information.

For the ePS10, the following setups are available:

- ePS10 MAIN PA, 60-120kHz
- ePS10 MAIN PA, 85-120kHz.
- ePS10 MAIN PA, 120-120kHz.

➢ ePS10

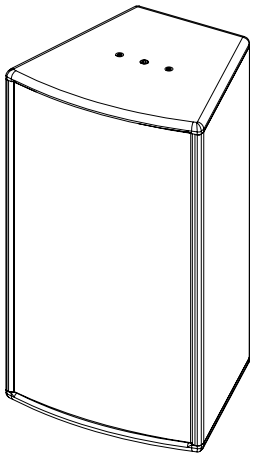

➢ ePS10 + eLS600

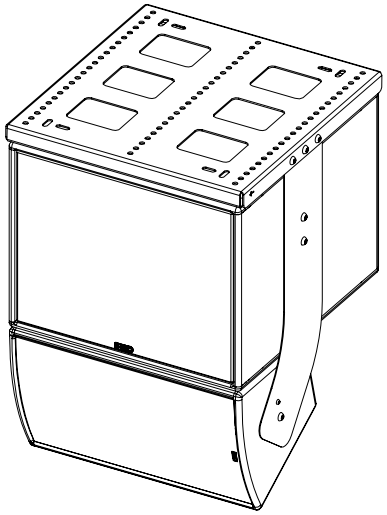

➢ ePS10 + eLS18

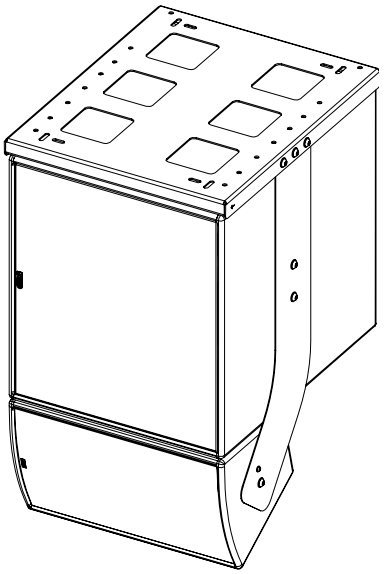

HF DIRECTIVITY

→ The ePS10 speaker can be used in horizontal or vertical position.

→ It's easy to change the HF dispersion to deal with every request.

Place a flathead screwdriver in the space between the grille and the cabinet to release the grille.

Remove the grille.

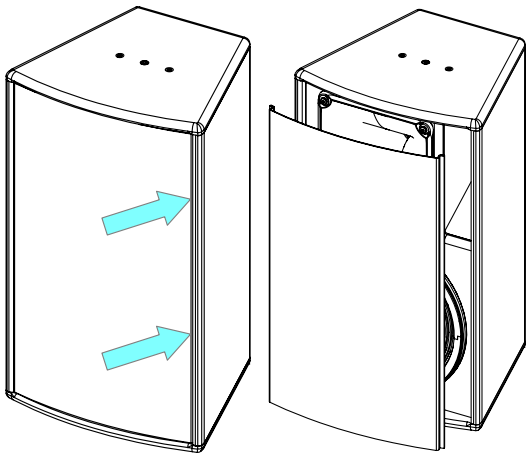

Remove the 4 screws that hold the horn. Remove it.

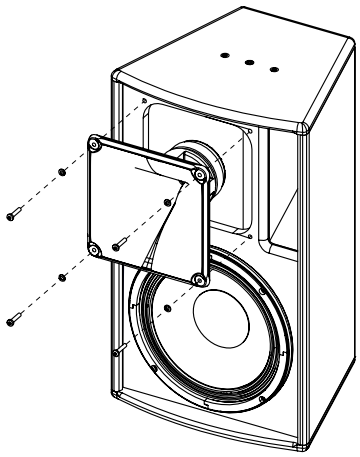

Position the horn according to the desired HF dispersion.

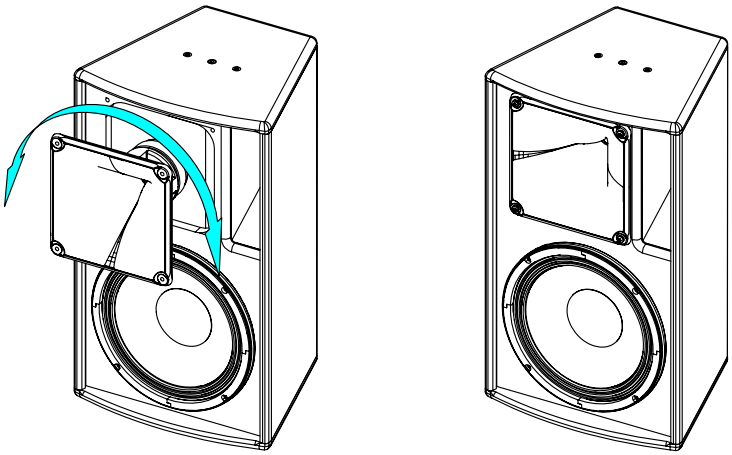

Narrow aperture = widest Dispersion

Reassemble the assembly and replace the grille.

CROSSOVER FREQUENCY

→ 60 Hz: Full range application.

→ 85, 120 Hz: Use with eLS600.

ACCESSORIES

WARNINGS

All ePS accessories are specifically rated in agreement with structural computations.

Never use other accessories when assembling ePS10 cabinets than the ones provided by NEXO: NEXO will decline responsibility if any component is purchased from different supplier.

PROHIBITED: ePS10 below ePS10 or ePS10 below eLS600 without dedicated accessory

VNU-BUMP

LiftBar, can be used with VNI-WMADAPT.

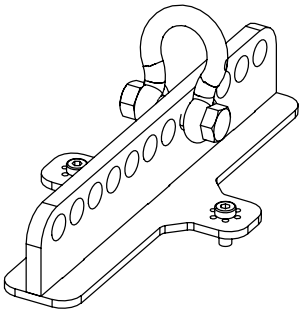

Remove 2 screws on the top
Screw VNU-BUMP to ePS10 (use only screws provided with VNU-BUMP).
Tight properly.

Refer to the Product Data Sheet

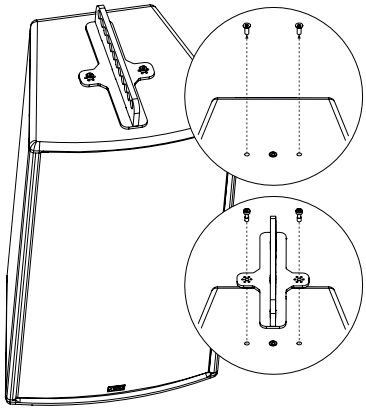

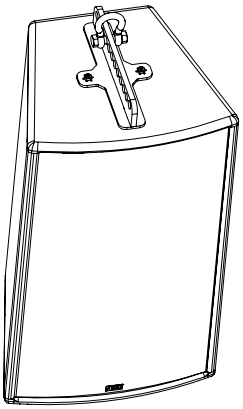

VNT-TCBRK3551

Rotary Truss Clamp

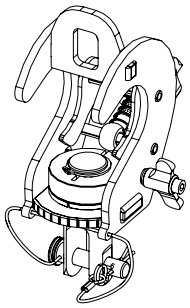

Place VNT-TCBRK3551 on VNU-BUMP at the desired hole.

Refer to the Product Data Sheet.

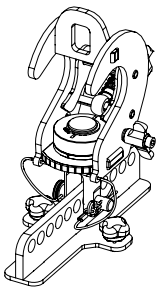

VNU-HBRK535

Horizontal Cradle, usable with:

VNI-CLADAPT.

VNI-WM330.

VNU-PLADAPT

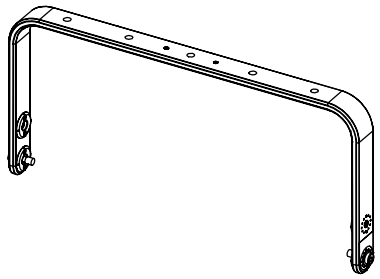

Remove the M10 inserts from each side.

Place HBRK535 on ePS10, use only fasteners provided. Tight properly.

Refer to the Product Data Sheet

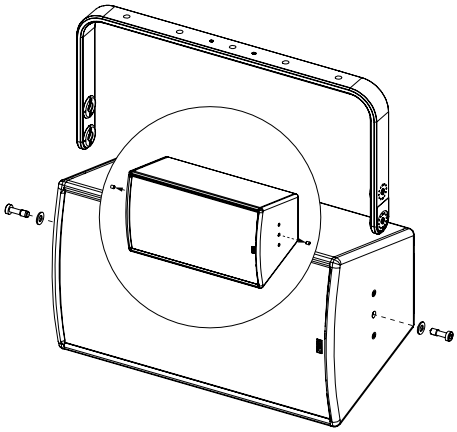

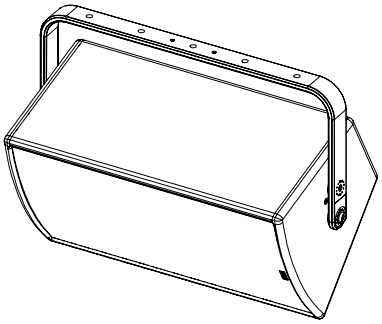

VNI-WMADAPT

Wall mount adapter

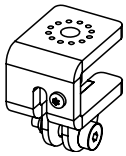

Place VNI-WMADAPT on VNU-BUMP, use only fasteners provided. Tight properly.

Refer to the Product Data Sheet

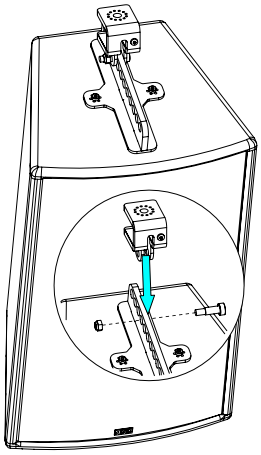

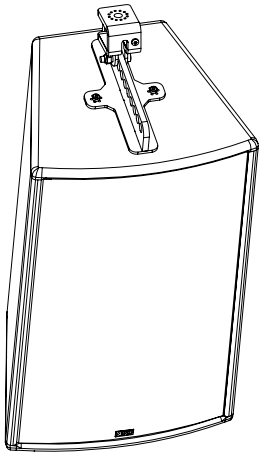

VNI-CLADAPT

Ceiling Adapter, use with VNI-HBRK535.

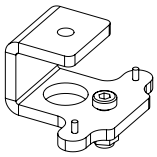

Screw VNI-CLADAPT to the ceiling (fasteners not provided).

Place the assembly on VNI-CLADAPT, use the 2 guides. Tight with the fasteners provided with VNI-CLADAPT.

Refer to the Product Data Sheet

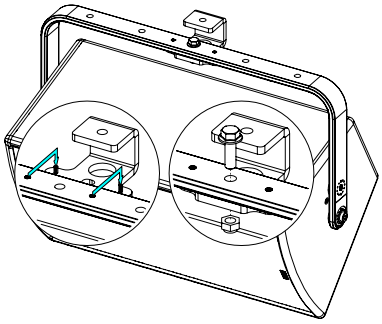

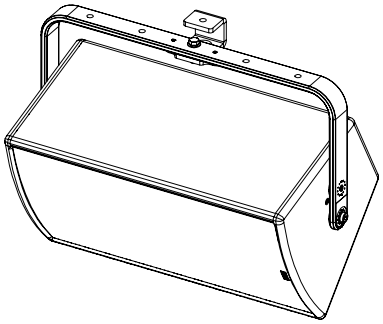

VNU-PLADAPT

Pole adapter

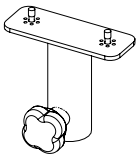

Place VNU-PLADAPT on VNI-HBRK535, use only fasteners provided.
Tight properly.

Refer to the Product Data Sheet

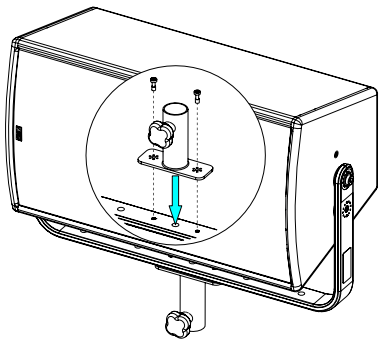

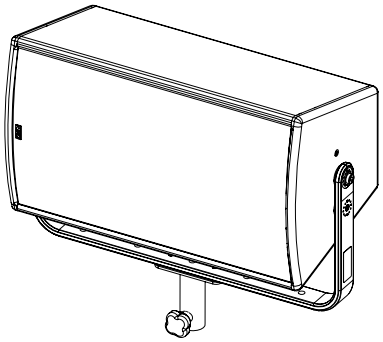

VNI-WM330

Wallmount, usable with:

VNI-WMADAPT / VNU-BUMP

VNU-HBRK535

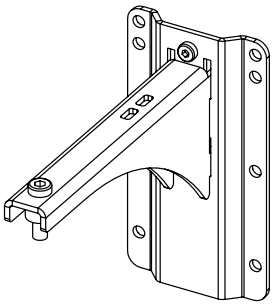

ePS10 / BUMP / WMADAPT

Place the assembly on VNI-WM330. Tight with the fasteners provided with VNI-WM330.

Refer to the Product Data Sheet

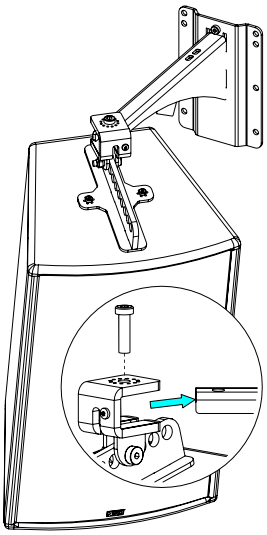

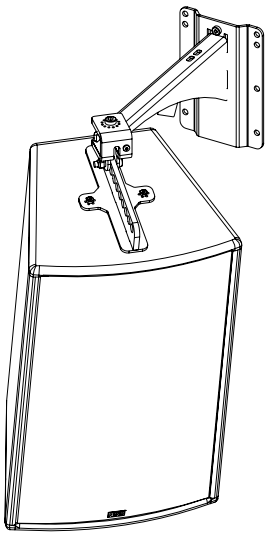

ePS10 / HBRK535

Place the assembly on VNI-WM330. Tight with the fasteners provided with VNI-WM330.

Refer to the Product Data Sheet

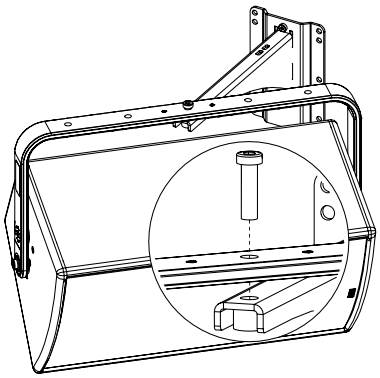

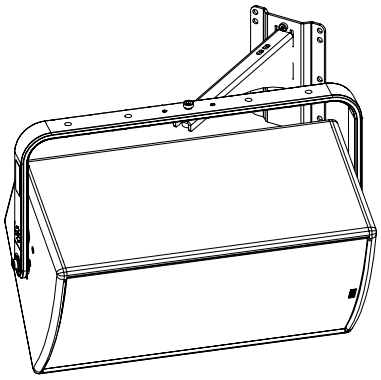

VNI-VCPL535

Coupler ePS10 under Vertical eLS18

Refer to the Product Data Sheet

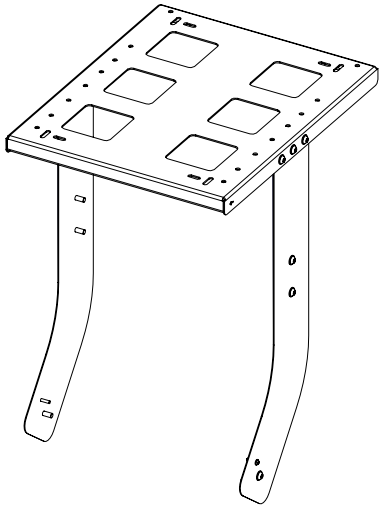

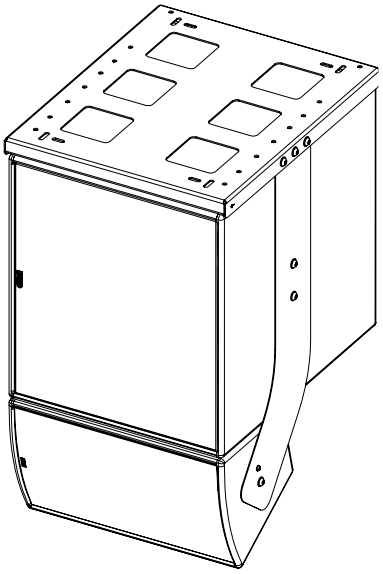

VNI-HCPL535

Coupler ePS10 under horizontal eLS600

Refer to the Product Data Sheet

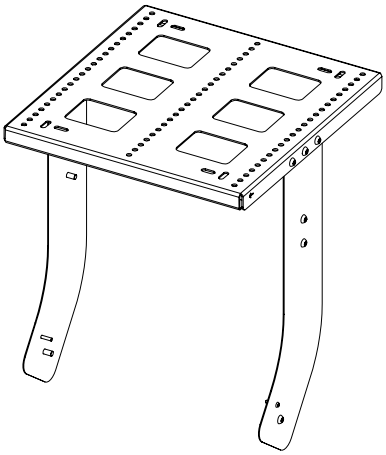

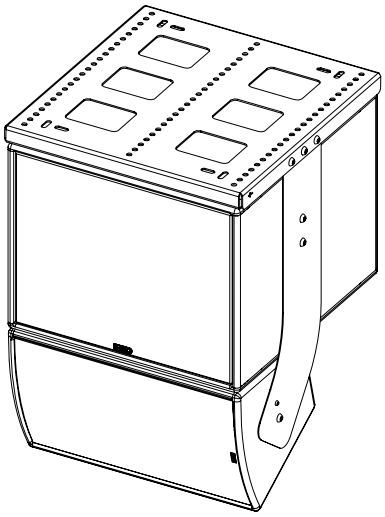

VNI-WM02

Wall mount adapter 25kg max

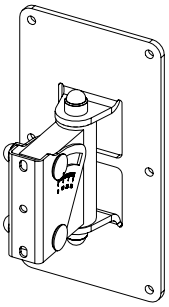

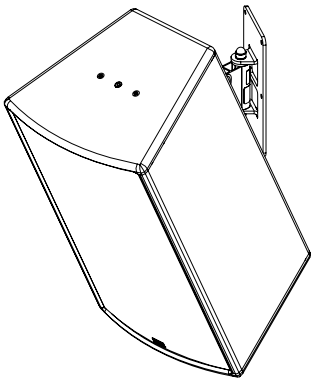

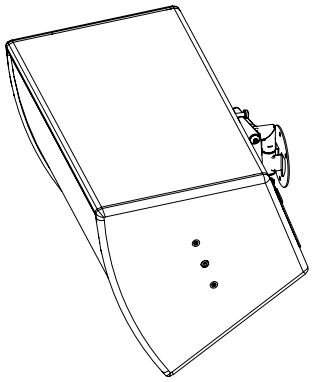

Remove 2 of the 3 screws on the back.

Screw speaker plate to ePS10 (use only screws provided with ePS10).

Place the speaker holder with ePS10 into wall bracket. Fix by tightening bolted assembly.

Refer to the Product Data Sheet

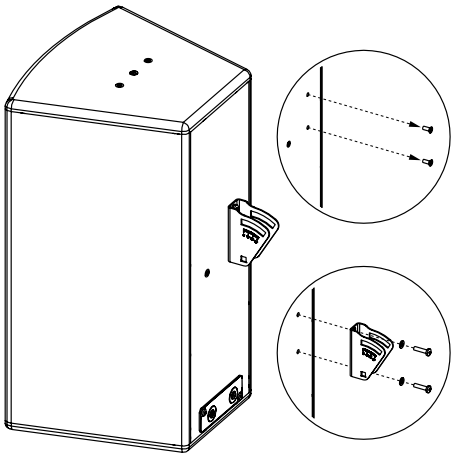

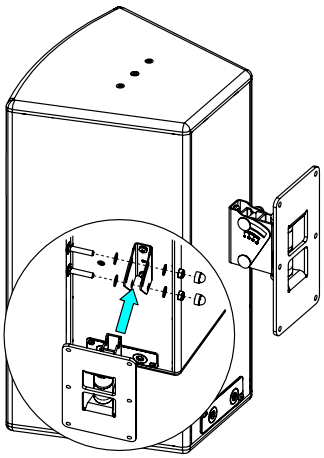

ARRAY EQ

The ArrayEQ allows to adjust the system frequency response in its lower range (see curves below, with different ArrayEq values):

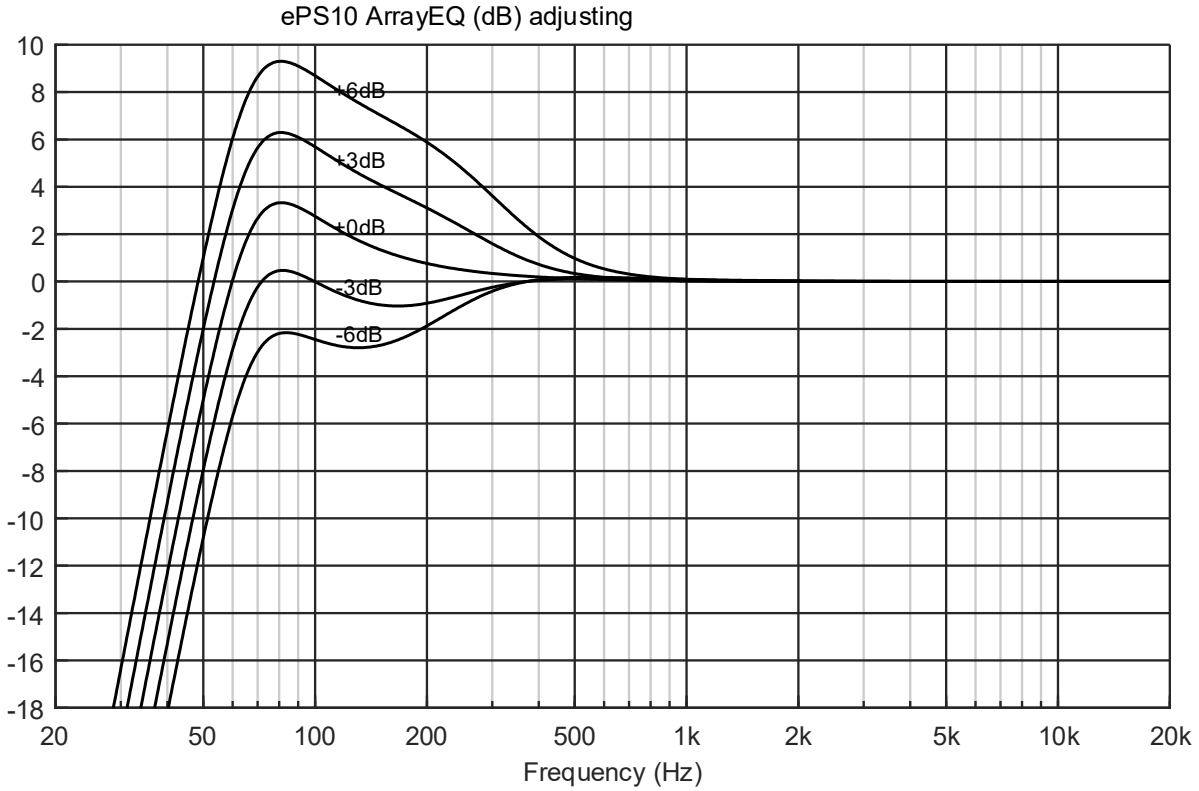

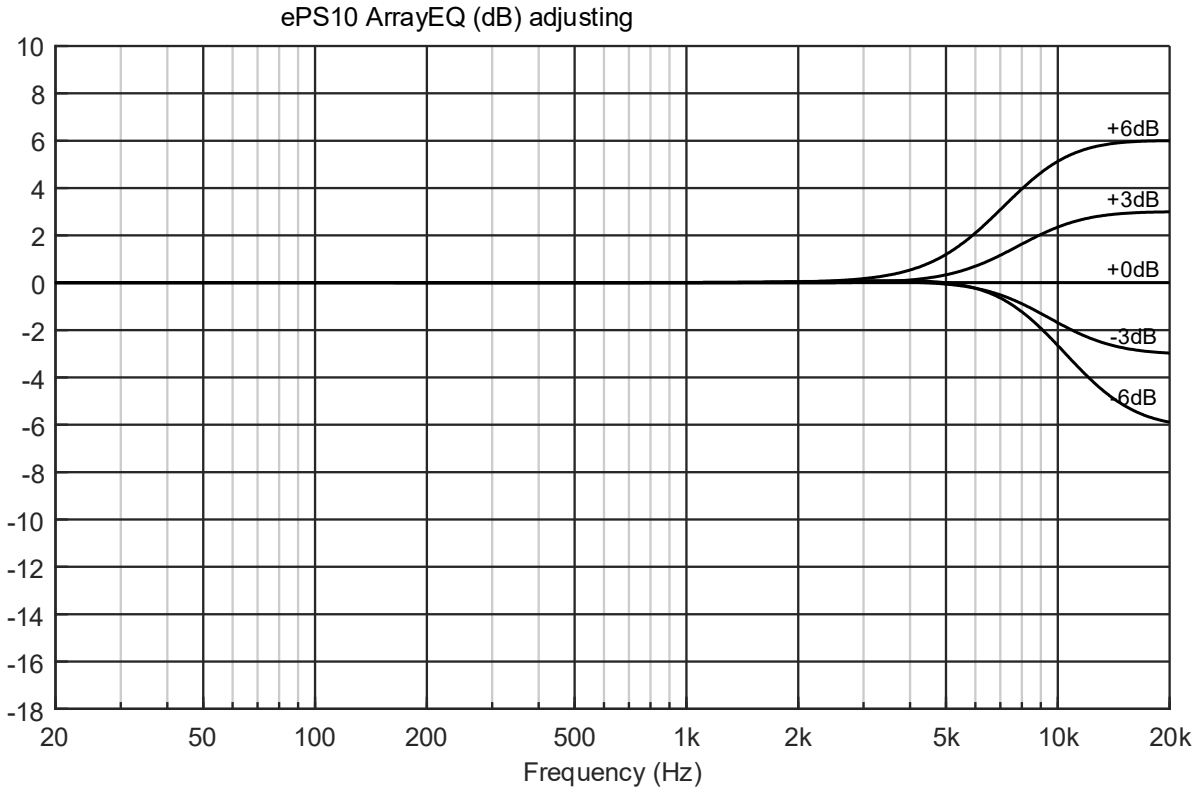

MAINTENANCE

NOTE:

Speakers and Grills can be sent back to NEXO for recycling

Driver access

Place a flathead screwdriver in the space between the grille and the cabinet to release the grille.

Remove the grille.

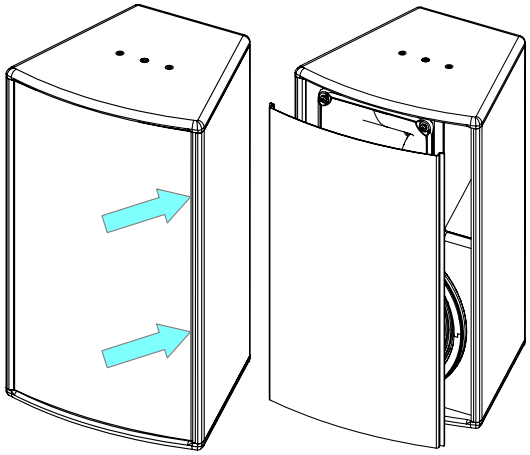

Remove the 4 screws to access the LF driver.

Tightening torque: 3.5 Nm (Thread Locker: Loctite 242)

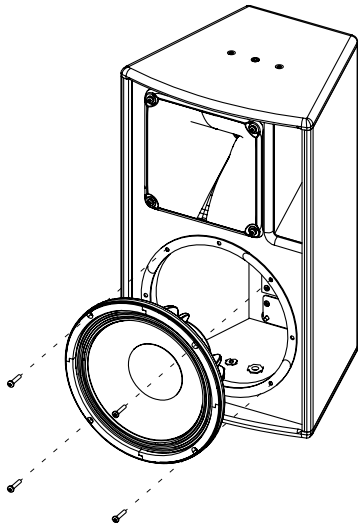

Remove the 4 screws that hold the horn. Remove it.

Tightening torque: 2.5 Nm (Thread Locker: Loctite 242)

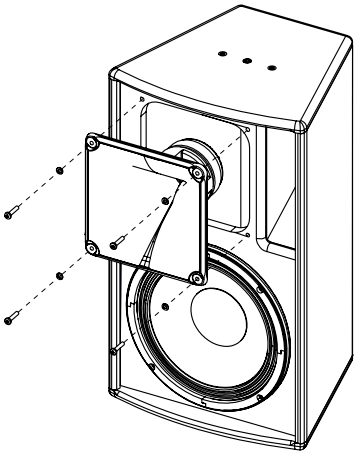

To access the HF diaphragm, remove the 4 screws.

Tightening torque: 2.5 Nm

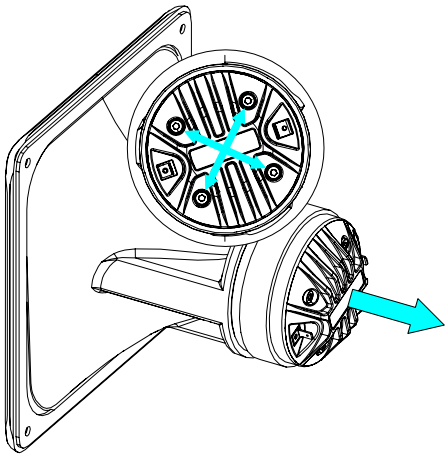

Reassemble the assembly and replace the grille.

LF: red (+) / black (-)

HF: orange (+) / grey (-)

Spare parts

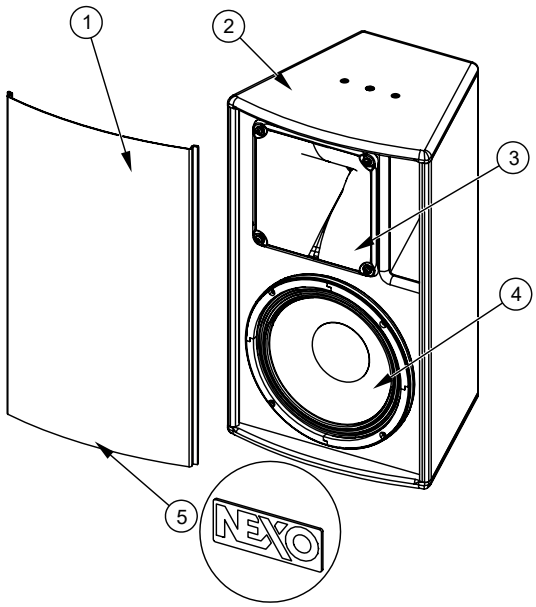

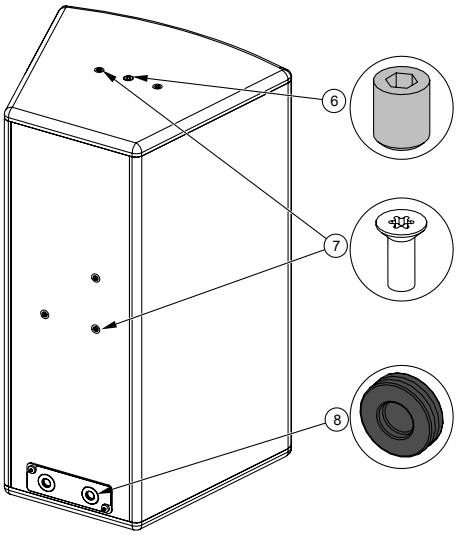

MARK	QUANTITY	REFERENCE	DESIGNATION
1	1	05EPS10-UA	ePS10 Complete grille Black
	1	05EPS10-UAPW	ePS10 Complete grille White
2	1	05EBEPS10	ePS10 Cabinet Black
	1	05EBEPS10-PW	ePS10 Cabinet White
3	1	05NH14-16R/K	HF diaphragm (with screws)
4	1	05HPB10N	HP 10” complete (with screws)
	1	05HPB10NR/K	Recone Kit 10” (with screws)
5	1	05LOGNEXO3	Logo NEXO
6	2	05VXTSTHC1012N	HEADLESS Screw M10x12 Black (x10)
	2	05VXTSTHC1012	HEADLESS Screw M10x12 White (x10)
7	7	05VXTCFX616N	VXFX 6x16 Black (x10)
	7	05VXTCFX616	VXFX 6x16 White (x10)
8	2	05PASF-DG9E1	Grommet DG11
	2	05PASF-DG11PW	Grommet DG11 White Ø15.5mm (x2)

TECHNICAL SPECIFICATIONS

WITH NEXO ELECTRONICS

Modèle	ePS10
Frequency range (±6dB)	70 Hz – 20 kHz
Peak SPL Level (1m)	130 dB Peak
Operating voltage	32 Vrms
Vertical Dispersion	+25°/-30°
Horizontal Dispersion:	50° to 100° asymétrique
Crossover Frequency	70 Hz, 85 Hz, 120 Hz
Nominal Impedance	8 ohms

SPECIFICATIONS

Model	ePS10
Components	LF 10'' Neodymium long excursion 8 ohms HF 1.4'' diaphragm – 8 Ohms
Material	Baltic birch plywood 15mm
Finish	Black or White structural paint (Custom RAL upon request)
Front finish	Black acoustic fabric fitted front steel front grille
Fittings	2x M6 and 1x M10 on the top and bottom for rigging accessories. 3x M6 on the back for rigging accessories (70mm pitch).
Connector	2 pairs (In/Out) of 7.62 mm pitch screw terminal blocks. Cables from 0.75 mm^2 to 3.31 mm^2 (12 to 15AWG) copper section. From Serial number 212966110001 (noir) / 213206110001 (blanc), Fast connectors Cables from 0.2 mm2 to 4 mm2 (12 to 24 AWG) copper section. Cable with maximum outside diameter of 11 mm.
Weight	14.8 kg / 32.6 lb
ID Classification	IP55 with IPCOV
Dimensions	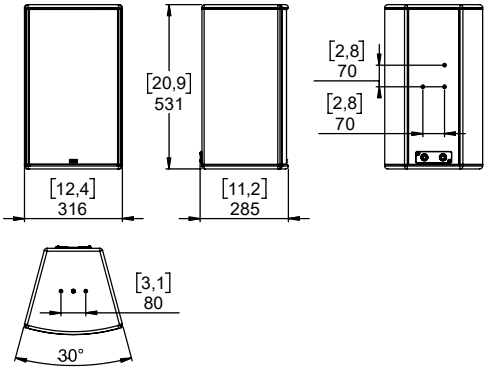

USER NOTES

NEXO S.A.

Parc d'activité de la Dame Jeanne
F-60128 PLAILLY

Tel: +33 3 44 99 00 70
Fax: +33 3 44 99 00 30
E-mail: info@nexo.fr

nexo-sa.com