2026-10-22

P18

DP6424-01c-DI

NEXO

P18-I

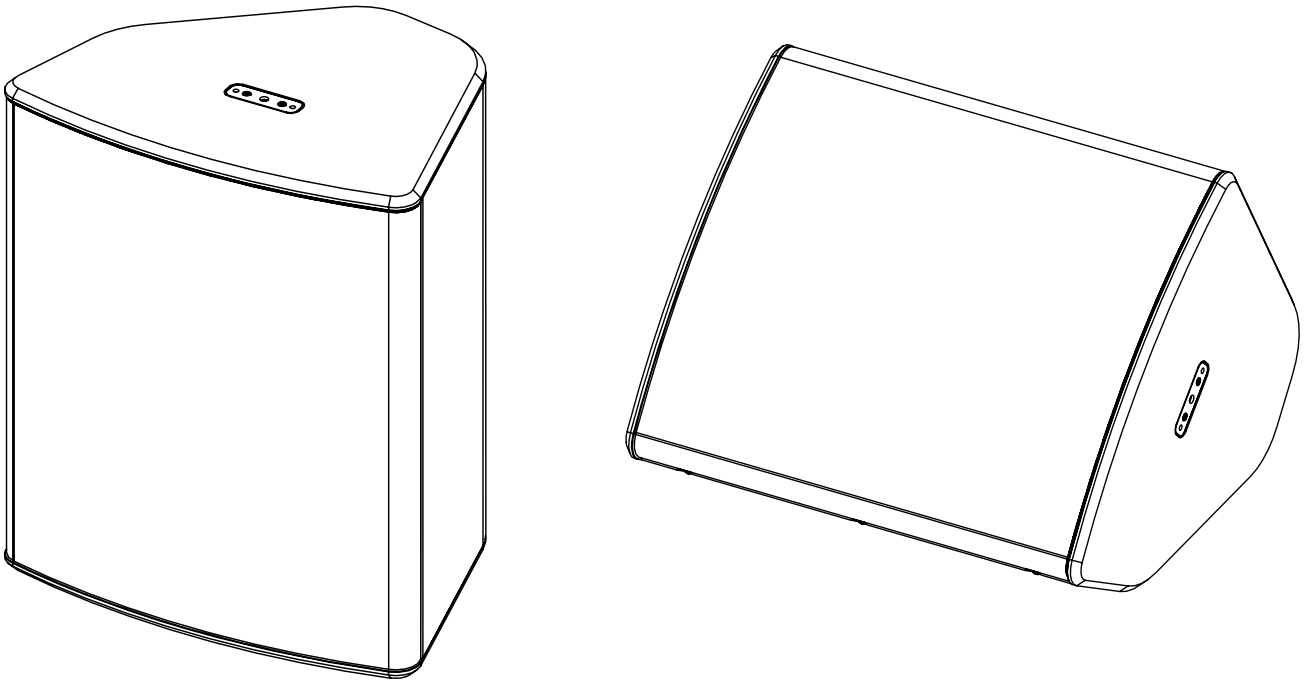

User manual

IP55

TABLE OF CONTENTS

TABLE OF CONTENTS 2
WARNINGS 3
EQUIPMENT 4
DESCRIPTION 5
PRESET 6
HF DIRECTIVITY 8
CROSSOVER FREQUENCY 8
ACCESSORIES 9
ARRAY EQ 15
MAINTENANCE 16
TECHNICAL SPECIFICATIONS 18
USER NOTES 19

WARNINGS

PRECAUTIONS

Do not open the speaker, do not try to disassemble it neither to modify it in any way. The system doesn't include any user-repairable part.

If the system seems to be malfunctioning or damaged, stop using it at once and have it repaired by a NEXO qualified technician.

Do not expose the system directly to the sun or to the rain, do not immerse it into fluids, do not place objects filled with liquid on the system. If a liquid gets into the system, please have it inspected by a NEXO qualified technician.

When flying outdoor systems ensure that the system is not exposed to excessive wind or snow loads and is protected from rainfall.

In case of wind greater than 8 on Beaufort scale (72km/h – 45mph), a touring system has to be landed or an additional securing has to be implanted.

For fixed installations, wind loading has to be taken into account in accordance to the national standards

The connection should be performed by qualified technician, by ensuring that power is off.

Operating temperature with temperate climate: 0°C to +40°C (+32°F to +104); -20°C à +60°C (-4°F to +140°F) for storage.

SAFETY INFORMATIONS

Read this manual before using the speaker.

Keep this manual available for further reference.

Observe all warnings and cautions.

Please check the NEXO Web site **nexo-sa.com** to get the most up-to-date version of this manual.

Ensure you are aware of the safety rules applying to rigging, stacking or installing on tripod or speaker stand. Failure to observe these rules may expose persons to potential wounds or even death.

Only use the system with accessories specified by NEXO.

Please always consult a NEXO-accredited technician if the installation needs architectural works and observe following precautions:

Mounting Precautions:

- Please select screws and mounting location supporting 4 times the system weight.
- Do not expose the system to excessive dust, vibrations, to extreme cold or hot temperatures, to reduce the risk of damaging components.
- Do not place the system in an unstable position: it could fall accidentally.
- If the system is used on a tripod, please ensure the tripod's specifications are adapted and that its height does not exceed 1.40m/55". Do not move the tripod with the system in position.

Connection and Powering Precautions:

- Unplug connected cables before moving the system.
- Power off the system before connecting the system.
- When switching on the installation, the amplifier must be powered last; when switching the installation off, shut off the amplifier first.
- If you work by cold temperatures, progressively raise the level to nominal value during the first minutes of use, to allow the system components to stabilize.

Please check regularly the system condition.

HIGH SOUND PRESSURE LEVELS

Exposure to very high sound pressure levels may cause permanent hearing losses. Degrees of hearing losses may be different from one person to another, but almost everybody will be affected if exposed to high sound pressure levels during a long period of time. The OSHA (Occupational Safety and Health Administration) American Agency specified the following maximal exposures:

Number of Hours	Sound Pressure Level (dBA), Slow Response
8	90
6	92
4	95
3	97
2	100
1 ½	102
1	105
½	110
¼ or less	115

WASTE OF ELECTRIC OR ELECTRONIC EQUIPMENT

This symbol on the product or its packaging indicates that this product must not be treated as household waste. Instead, it is your responsibility to hand it over to a designated collection point for the recycling of waste electrical and electronic equipment. By ensuring your waste equipment is recycled, you will help prevent potential negative consequences for the environment and human health, which could appear if this product was not recycled. Recycling helps spare natural resources. For more information about the recycling of this product, please contact your local city office, your household waste disposal service or your reseller.

EQUIPMENT

3 locations for hanging, 1 on the back and on both sides.

WARNING: The depth of the M10 thread is 14mm (0.55 inch).

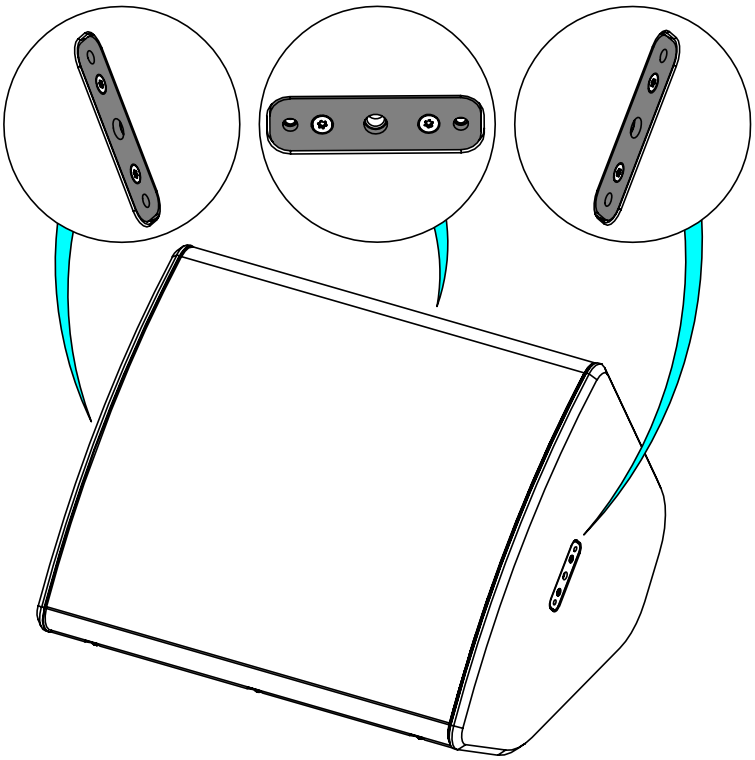

Assembly on distance rod or speaker stand

Place distance rod on the connector plate (M20) of the Sub.

Place PLADAPT on P18-I.

Put the assembly on the distance rod / monitor stand (diameter of 35mm).

It may take two to handle P18.

IMPORTANT

Speaker stand must be rated for P18 weight.

Speaker stand must always be installed on a horizontal surface.

Stand height and footprint must be defined to prevent assembly from collapsing.

Ensure that audience is not allowed within a safety area which radius is equal or higher than assembly height.

Test steadiness of the assembly by pushing in all directions.

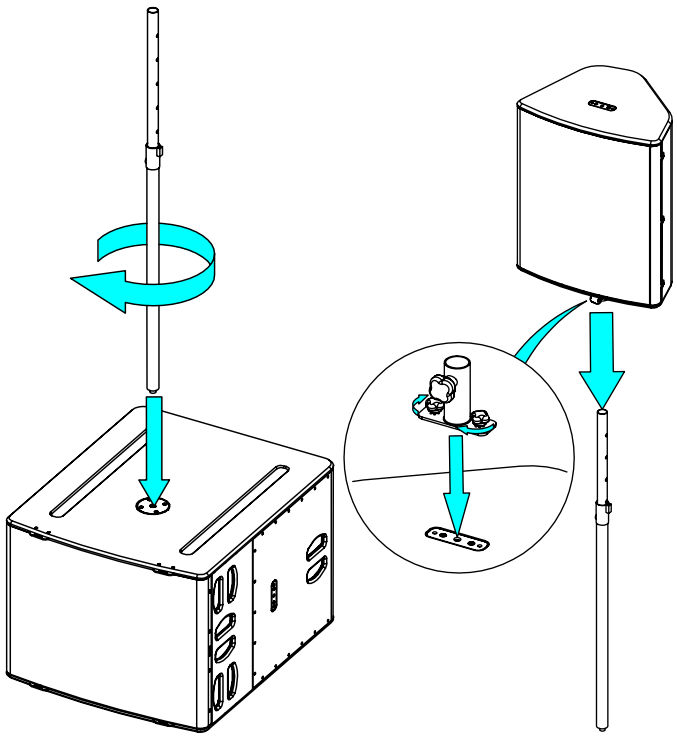

DESCRIPTION

→ The P18 is a compact full-range coaxial speaker

→ P18 HF Dispersion:

- 60° - 60° with standard horn
- 90° – 40° with PNU-P18FLG9040
- PS with PNU-P18FLGPS (Asymmetrical Dispersion)

→ P18 can be used alone or with L20 subwoofer

→ The speaker is equipped with a cable gland (clamping range, Ø 5 to 12 mm), supplied with a fixed cable 2 x 1.5mm^2 section, length 4m, outside diameter 8mm ±1mm.

→ (+) Red/Brown / (-) Black/Blue

→ From Serial number N° 213393200101 (black) / 213418200101 (white) fast connectors.

To wire P18-I, slit the membrane of the grommet crosswise.
Pass the cable through.
Make the connection to the fast connectors.
Permissible cables from 0.2 mm^2 to 4 mm^2 (12 to 24 AWG).
Place the IPCOV.

IP54
IP55: From N° 213393200101 (black) / 213418200101 (white)
Be careful to place the IPCOV correctly.

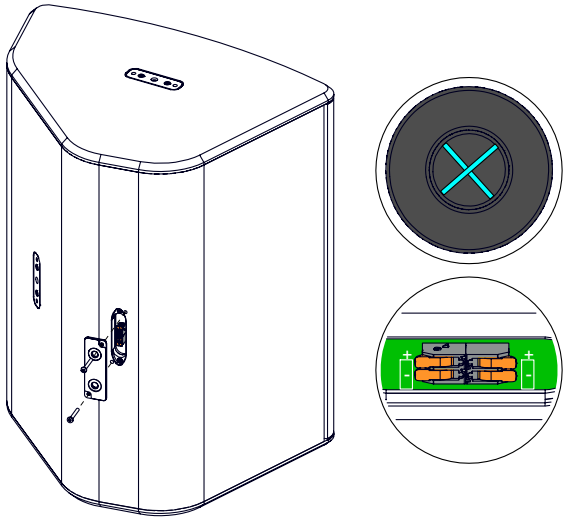

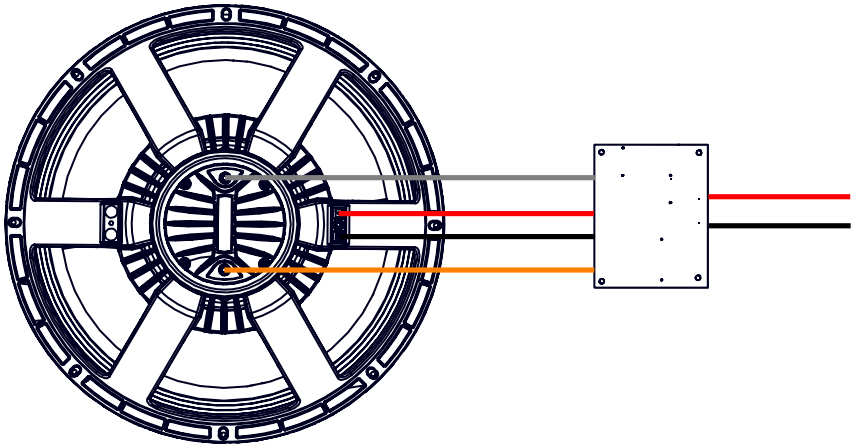

→ Amplification

- The P18 speakers must be used with a NEXO processor to handle EQ, phase alignment, crossover and excursion/thermal protection for the system loudspeaker. There are two NEXO processor series supporting the P18 speakers: NXAMP (4 channels) amplified processors and DTD processors (stereo + sub). DTD processors ensure optimal performances when used with DTDAMP power amplifiers.
- The following table shows the number of P18 speakers and L18 or L20 subwoofers usable with each solution.

	microNXAMP4X1	NXAMP4X2mk2	NXAMP4X1mk2 (BRIDGED)	NXAMP4X4mk2
P18	1 per channel (bridged)	1 per channel (1)	Up to 2 per channel	Up to 3 per channel
L18	1 per channel (bridged)	1 per channel (1)	1 per channel	Up to 2 per channel
L20	1 per amplifier (bridged - paralell)	1 per channel (bridged)	1 per channel	Up to 2 per channel (1)

(1) Recommended Powering Solution

PRESET

Please consult nexo-sa.com for NEXO TD Controllers firmware information.

For the P18, the following setups are available:

→ MAIN is the recommended setup for most FOH application, similar to previous firmware setup.

→ MONITOR is recommended for monitor applications. Warning: this setup is a low latency setup and therefore its phase is not compatible with other NEXO cabinets, including subs.

Preset

- P18 MON PA 6060, with high-pass at 50, 85 or 120 Hz.
- P18 MON PA 9040, with high-pass at 50, 85 or 120 Hz.
- P18 MON PA PSguide, with high-pass at 50, 85 or 120 Hz.

- P18 MAIN PA 6060, with high-pass at 50, 85 or 120 Hz.
- P18 MAIN PA 9040, with high-pass at 50, 85 or 120 Hz.
- P18 MAIN PA PSguide, with high-pass at 50, 85 or 120 Hz.

➢ P18

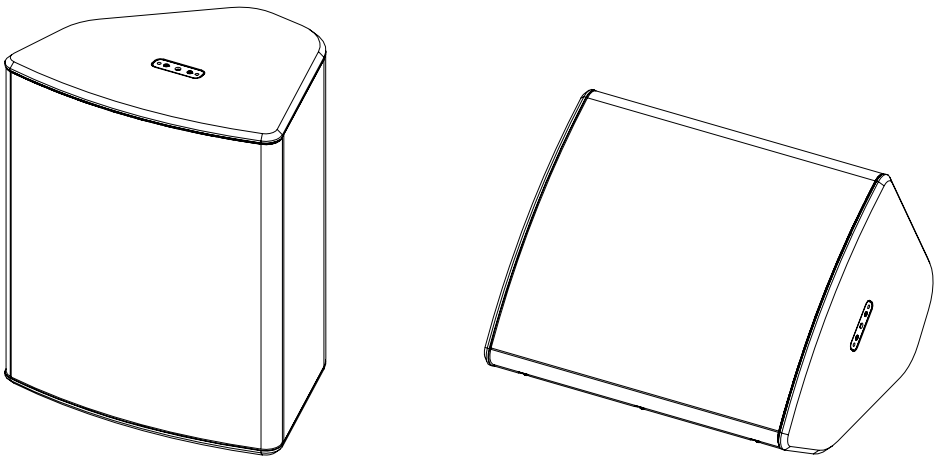

Front of house and stage monitor applications

➢ P18 + Sub

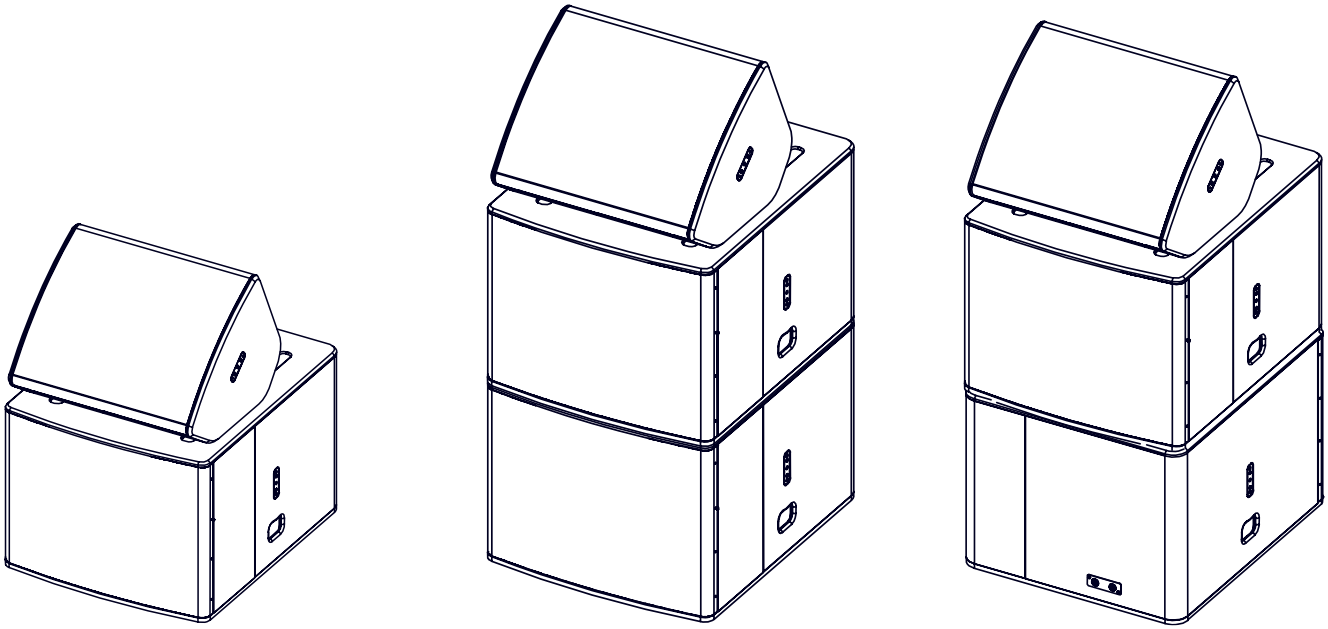

Stage monitor applications with Subs (OMNI or CARDIO modes)

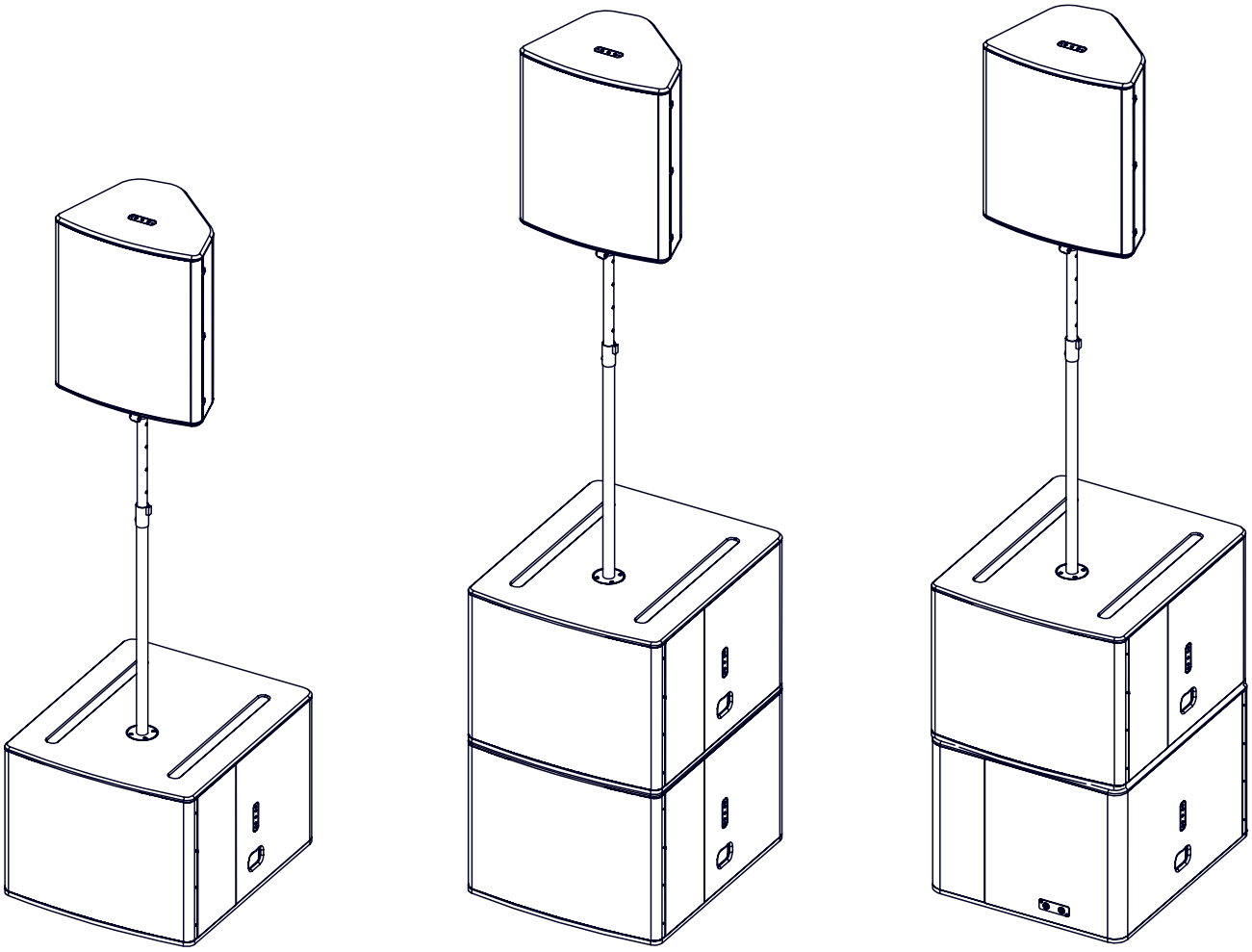

Front of house applications with Subs (OMNI or CARDIO modes)

HF DIRECTIVITY

- → The P18 speaker can be used in horizontal or vertical position.
- → The standard horn is a 60° - 60° HF dispersion. It's easy to change the HF dispersion by adding a specific flange. Different mounting possibilities and flange rotation allow to deal with every request.

Loosen the 3 screws, Remove the grille.

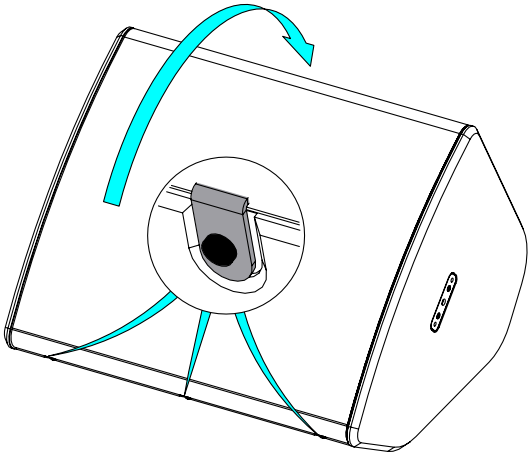

Remove the 4 HF Cap.

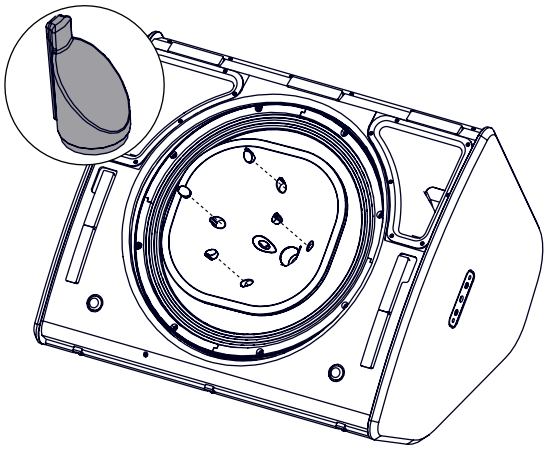

Place the flange, if necessary, rotate it.

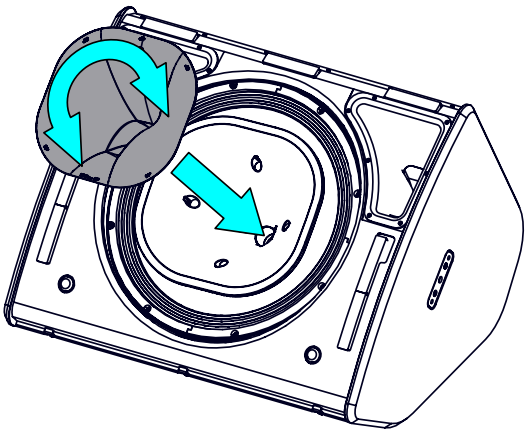

Magnets keep the horn in place.

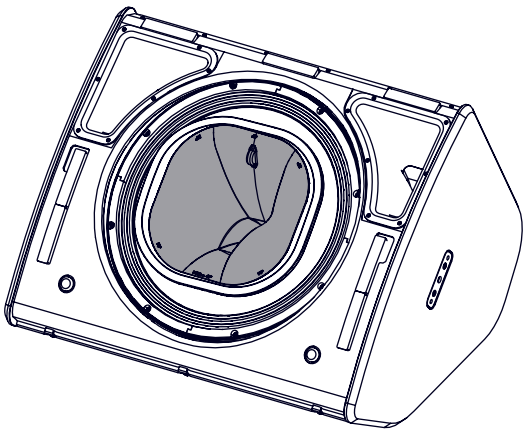

When replacing the grille, ensure it is well positioned in the top blade before fasten the hooks with the screws.

CROSSOVER FREQUENCY

- → 50 Hz: Full range application.
- → 85 Hz: Use as « front fill » on stage, complementing a main system. Use with a NEXO subwoofer, e.g. L20.
- → 120 Hz: For long throw applications.

ACCESSORIES

WARNINGS

All P18 accessories are specifically rated in agreement with structural computations.

Never use other accessories – including push-pins – when assembling P18 cabinets than the ones provided by NEXO: NEXO will decline responsibility over the entire P18 accessory range if any component is purchased from different supplier.

PROHIBITED: P18 below P18 or P18 below L18 or L20 without dedicated accessory

VNU-BUMP (PNT-BUMP)

LiftBar, use with P18,
LIFTADAPT, WMADAPT.

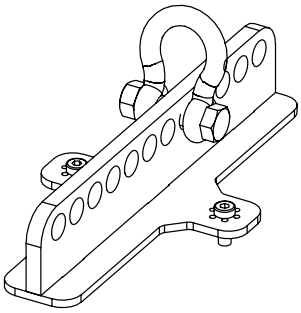

Place VNU-BUMP on P18 (only use the provided screws).
Tight properly

Refer to the Product Data Sheet.

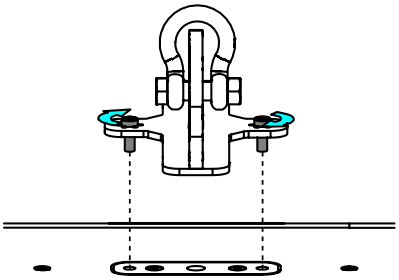

VNT-TCBRK3551

Rotary Truss Clamp

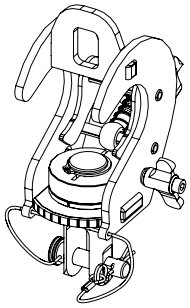

Place VNT-TCBRK3551 on VNU-BUMP at the desired hole.

Refer to the Product Data Sheet

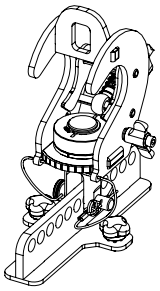

VNU-HBRK680

Horizontal Cradle, use with P18, CLADAPT, PLADAPT.

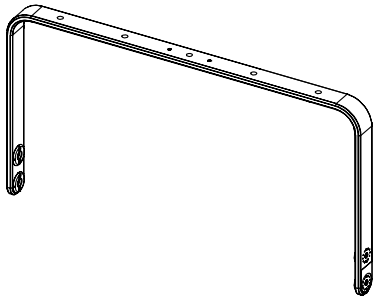

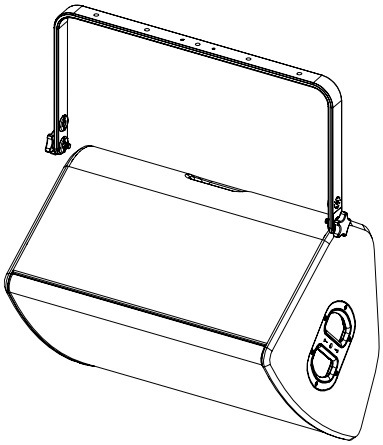

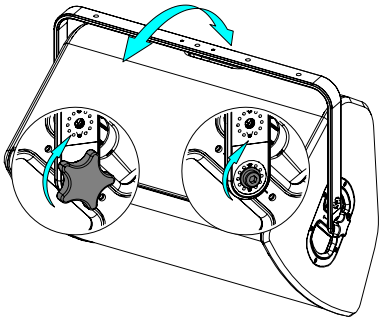

Place HBRK680 on P18, use only fasteners provided.

Tight properly.

Refer to the Product Data Sheet.

VNU-PLADAPT (PNT-PLADAPT)

Pole adapter, use with P18, HBRK680, VBRK18.

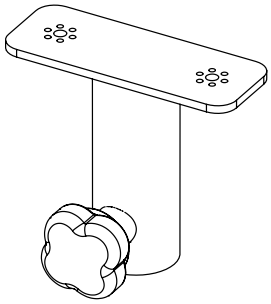

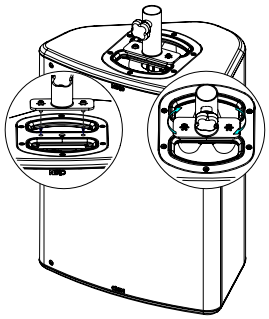

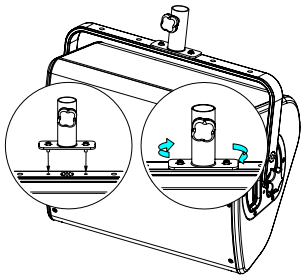

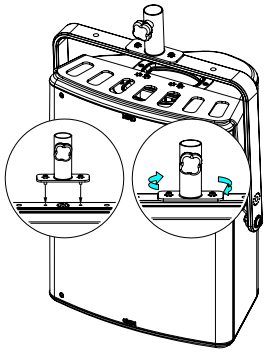

Place VNU-PLADAPT, use only fasteners provided.

Tight properly.

Refer to the Product Data Sheet.

PNU-VBRK18

Vertical Cradle, use with
CLADAPT, PLADAPT.

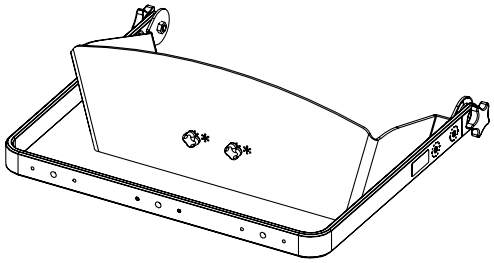

Place VBRK18 on P18, use only fasteners provided.

Tight properly.

Refer to the Product Data Sheet.

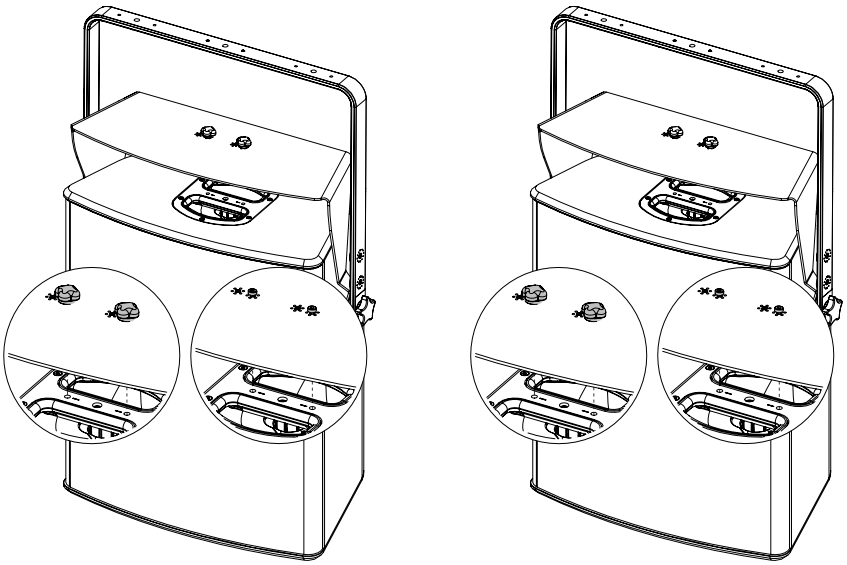

VNI-WMADAPT (PNT-WMADAPT)

Adapter, use with
VNU-BUMP, VNI-WM450.

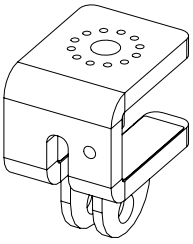

Refer to the Product Data Sheet.

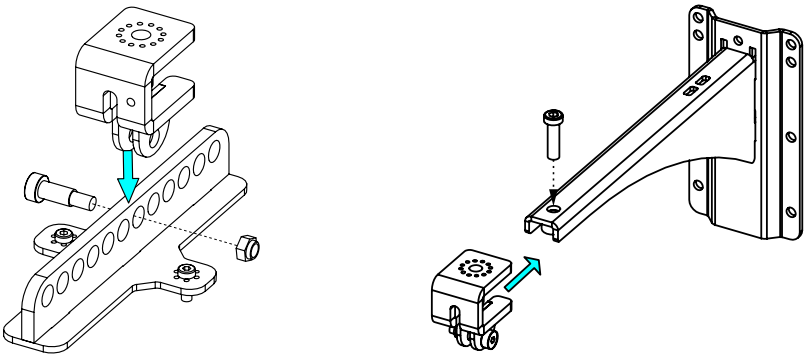

VNI-CLADAPT (PNI-CLADAPT)

Ceiling adapter, use with
VNU-HBRK680, PNU-VBRK18.

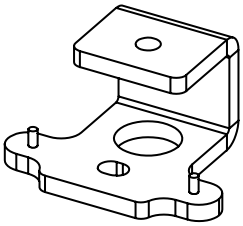

Screw CLADAPT to the ceiling (fasteners not provided).

Place the assembly on CLADAPT, use the 2 guides. Tight with the fasteners provided with CLADAPT.

Refer to the Product Data Sheet.

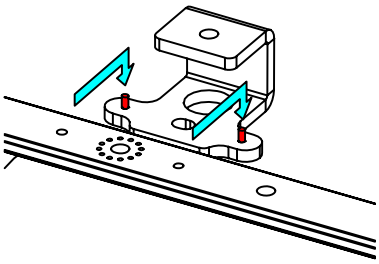

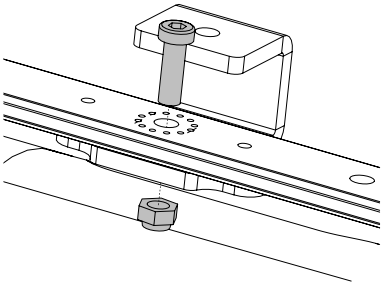

PNI-P18TOL18
PNI-P18TOL2L18

P18 Under 1xL18

P18 Under 2xL18 (Omni or Cardio)

Refer to the Product Data Sheet.

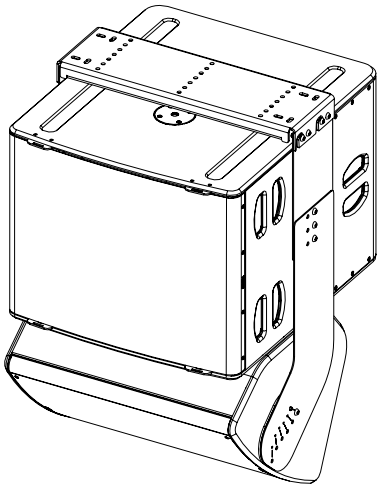

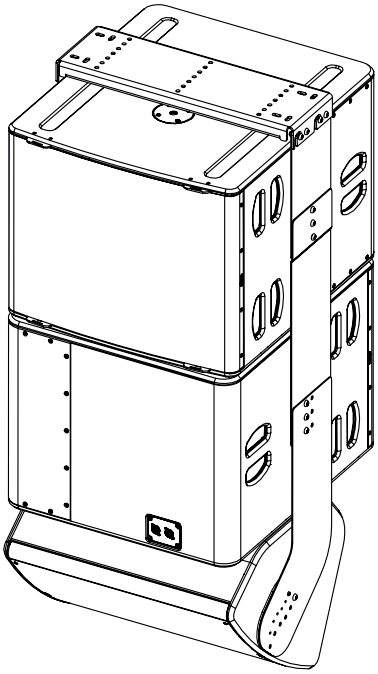

PNI-P18TOL20
PNI-P18TO2L20

P18 Under 1xL20

P18 Under 2xL20 (Omni or Cardio)

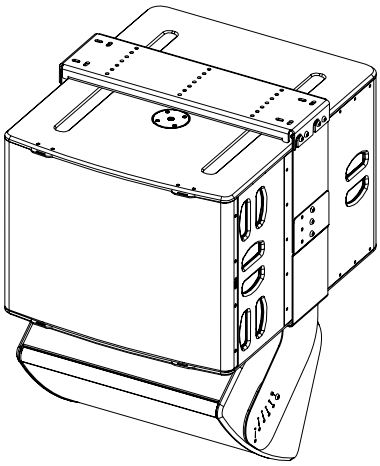

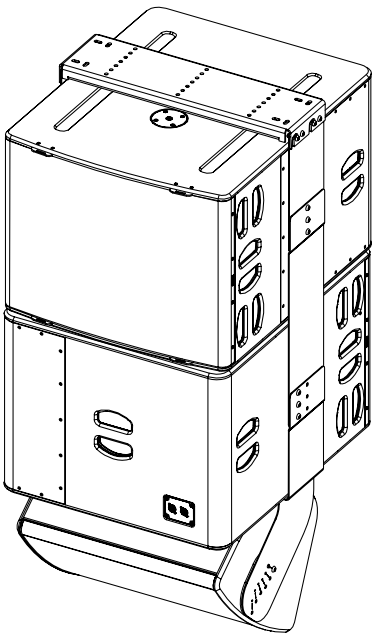

Refer to the Product Data Sheet.

VNI-WM450

Wallmount for P18, use with WMADAPT.

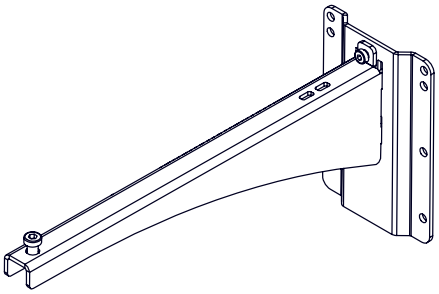

Mount the wall plate. Place the arm in the wall plate.

Lock with the provided screw.

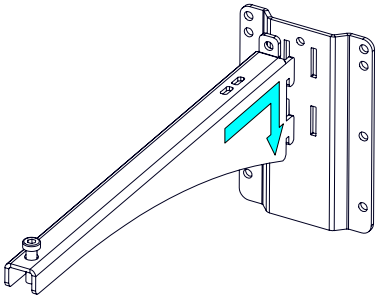

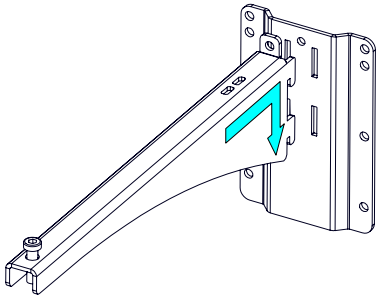

Refer to the Product Data Sheet.

PNU-P18FLGPS

HF Dispersion Horn ‘PS’

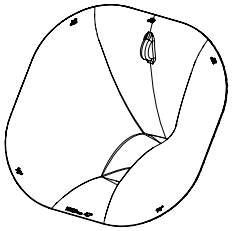

Remove the grille, remove the flange to place the PNU-P18FLGPS.

If it necessary, rotate it. Magnets keep the horn in place.

Refer to the Product Data Sheet.

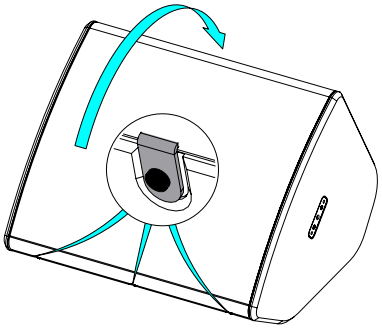

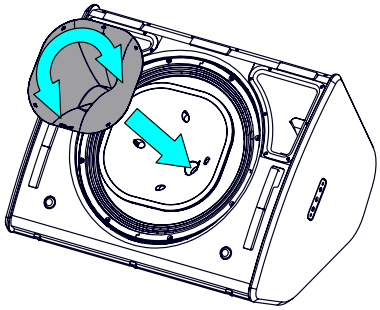

PNU-P18FLG9040

HF Dispersion Horn 90° - 40°

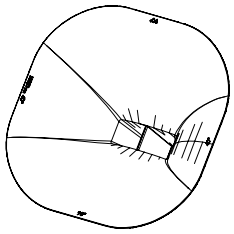

Remove the grille, remove the flange to place the PNU-P18FLG9040.

If it necessary, rotate it. Magnets keep the horn in place.

Refer to the Product Data Sheet.

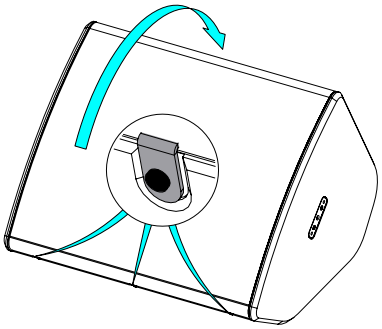

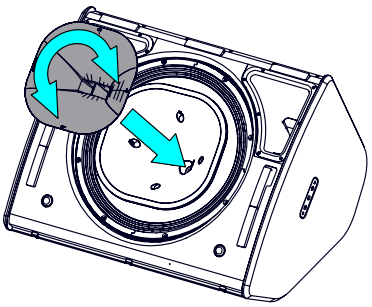

ARRAY EQ

The ArrayEQ allows to adjust the system frequency response in its lower range (see curves below, with different ArrayEq values):

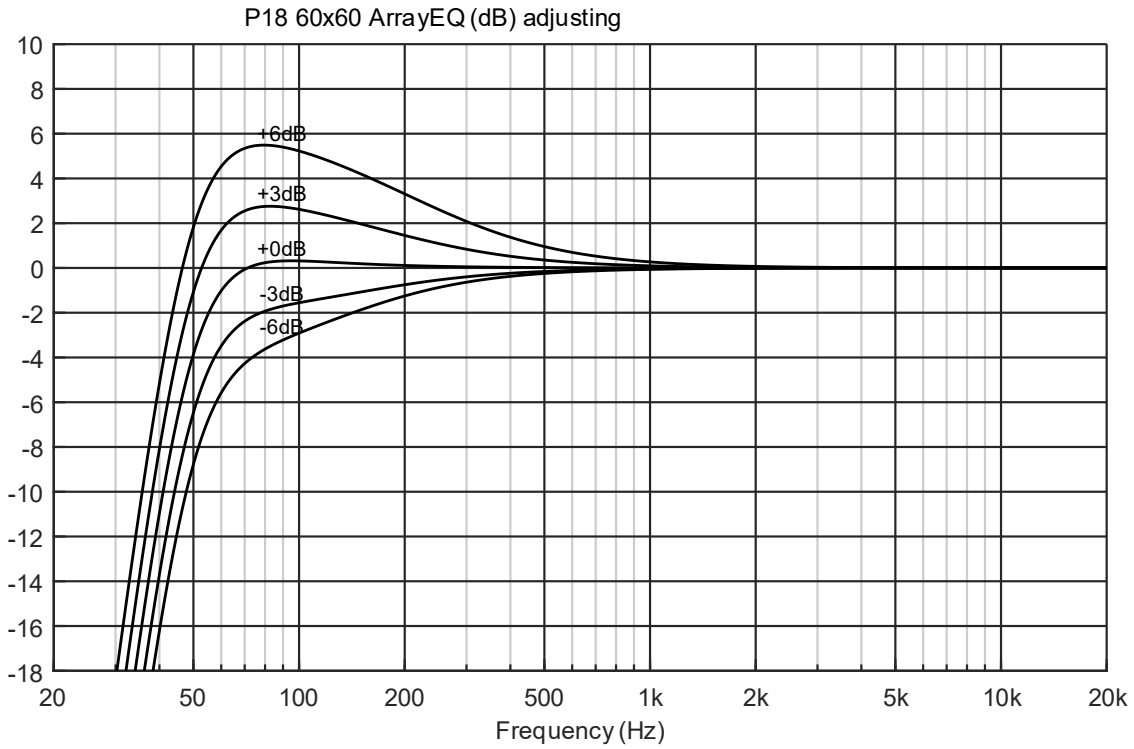

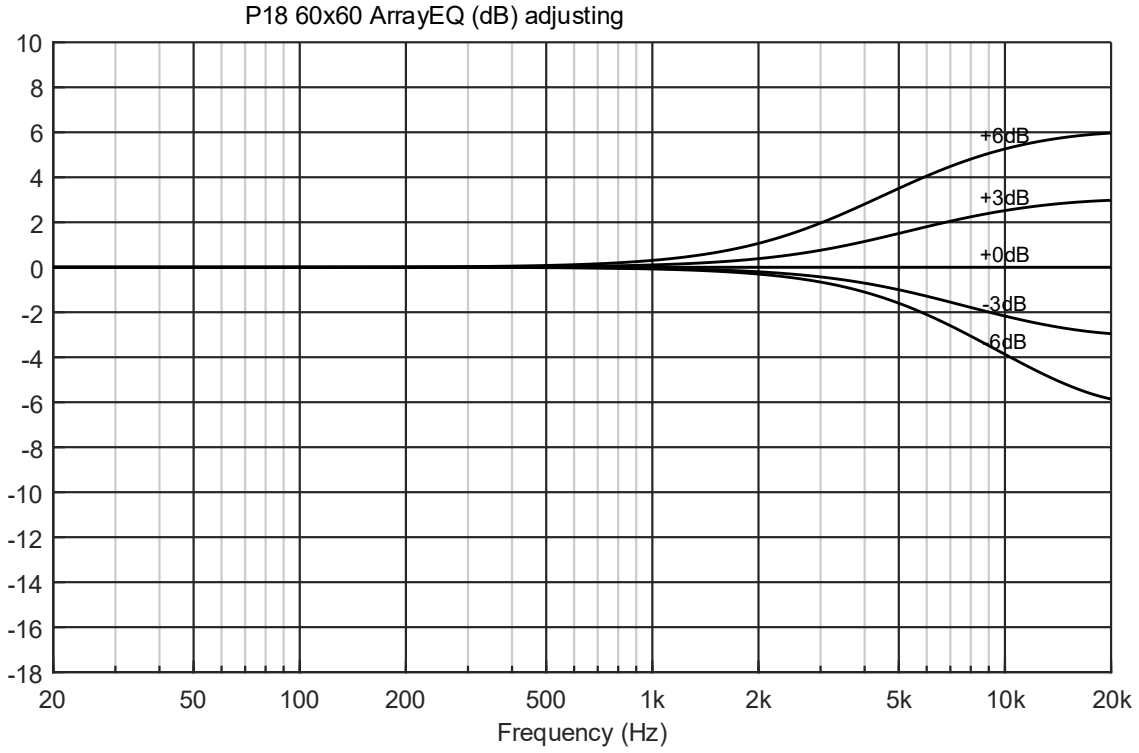

MAINTENANCE

Driver access

Loosen the 3 screws, Remove the grille.

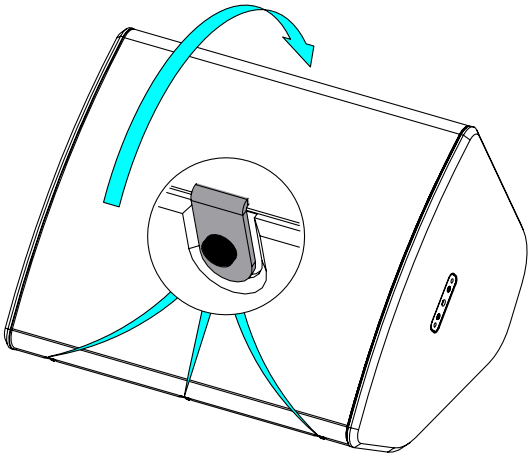

Remove the stickers.

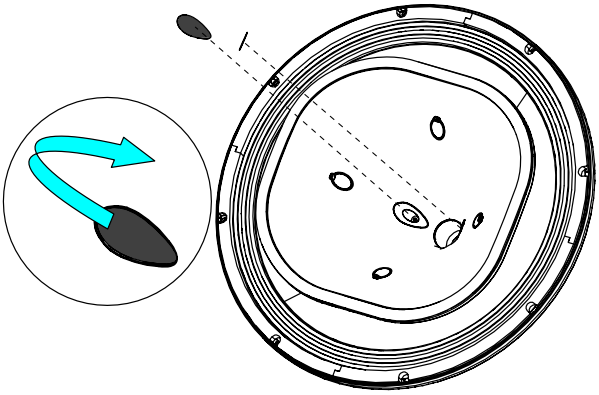

Remove the horn.

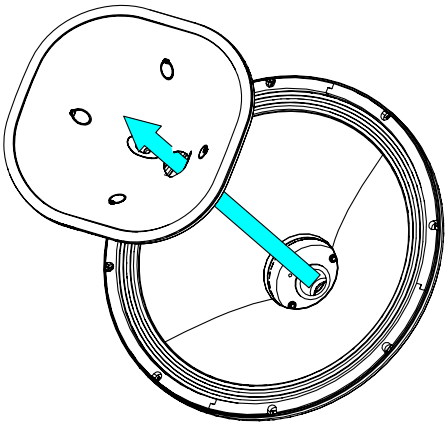

Remove 8 screws.
Tightening torque: 3.5 Nm (Thread Locker: Loctite 242)

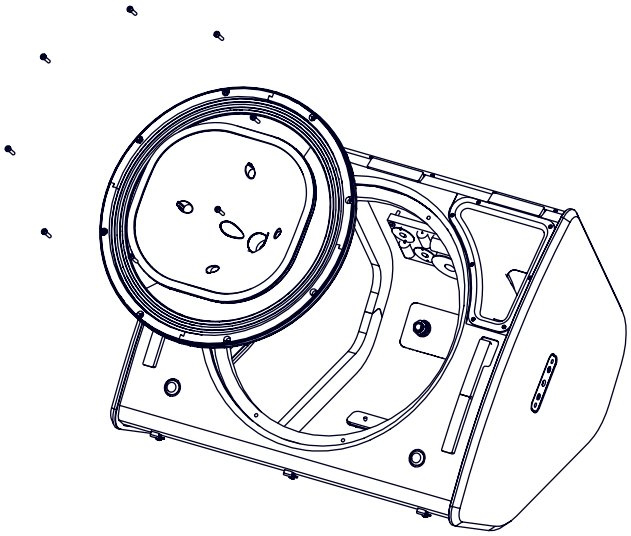

Remove the 2 screws.
Tightening torque: 2.5 Nm (Thread Locker: Loctite 222)

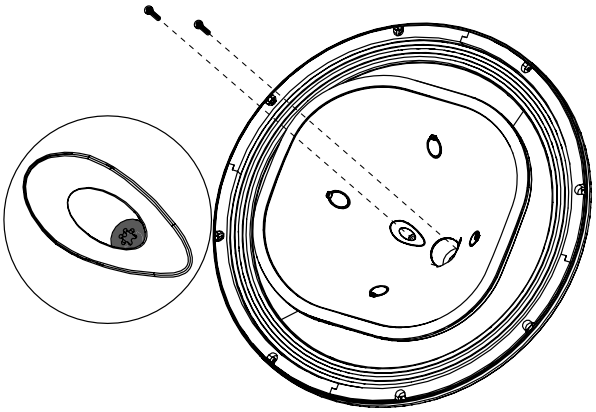

To access to the HF diaphragm, remove 4 screws.
Tightening torque: 2 Nm

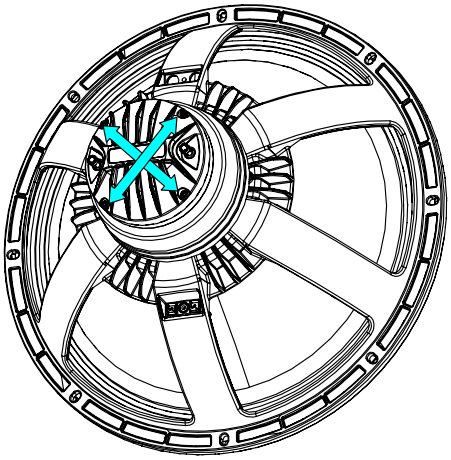

Spare parts

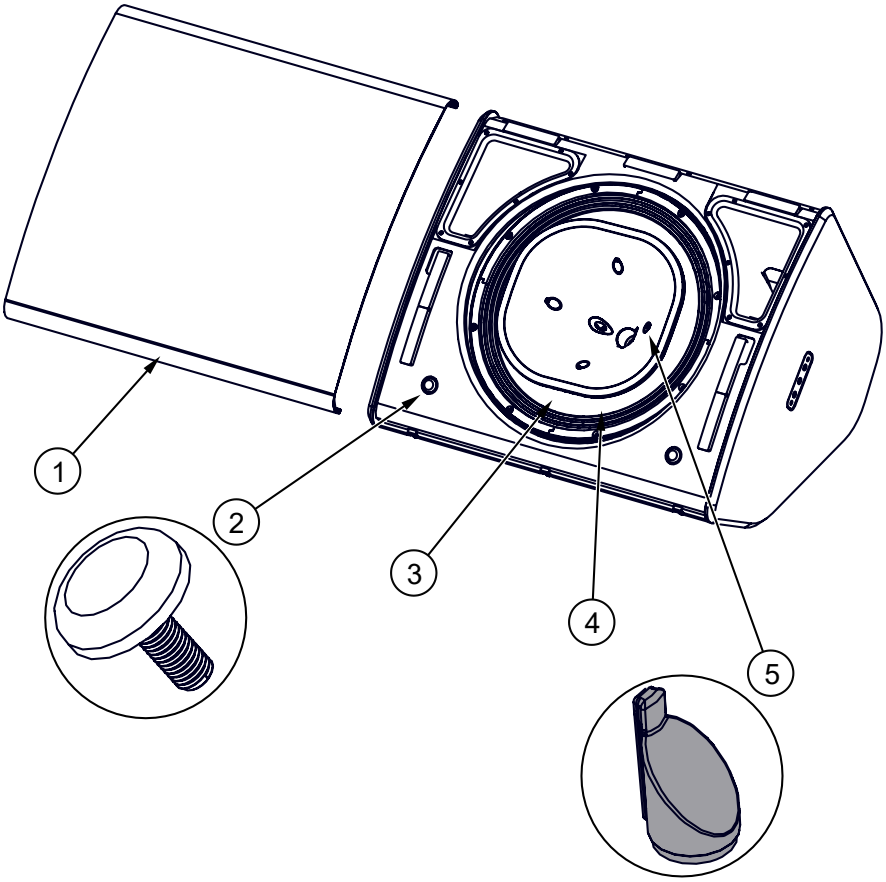

MARK	QUANTITY	REFERENCE	DESIGNATION
1	1	05P18UAI	P18 I & TIS COMPLETE GRID BLACK
	1	05P18UA-IPW	P18 I & TIS COMPLETE GRID WHITE
2	2	05RUBGRD01	Plastic Pad Black
	2	05RUBGRD01-PW	Plastic Pad White
3	1	05HPC18	HP18" COAXIAL NEODYNIUM 8 - 8 Ohms
	1	05HPC18R/K	HPC18 RECONE KIT
4	1	05NHP18R/K	HF DIAPHRAGM 4" - 8 Ohms with screws
5	4	05CAPB01	HF cap black
	4	05CAPB01-PW	HF cap White

NOTE:

Speakers and Grills can be sent back to NEXO for recycling

TECHNICAL SPECIFICATIONS

P18-I WITH NEXO ELECTRONICS

Model	P18-I
Frequency range (±6dB)	50 Hz – 20 kHz
Peak SPL Level (1m)	140dB Peak (Passive mode) / 142dB Peak (Active mode)
Operating voltage	55 Vrms (180 Vpeak)
HF dispersion (according to horns)	60°x60° - 90°x40° - Asymmetrical Dispersion 60° to 100°x40°
Crossover Frequency	50Hz – 85 Hz – 120 Hz
Nominal Impedance	Active mode (8Ω LF, 8Ω HF) – Passive mode: 8Ω

SPECIFICATIONS

Model	P18-I
Components	1x Coaxial LF 18” 8Ω long excursion & Neodymium HF 4” - 8Ω
Material	Baltic birch / Poplar plywood
Finish	Black or white structural paint
Front finish	Black or white acoustic fabric fitted front steel front grille
Fittings	Threated inserts on the back and on both sides for connection of mounting accessories
Connector	Cable gland, supplied with a fixed cable 2 x 1.5mm^2 section, length 4m. From Serial number 213393200101 (black) / 213418200101(white) Fast connectors
Weight	33 kg / 73 lb
Dimensions	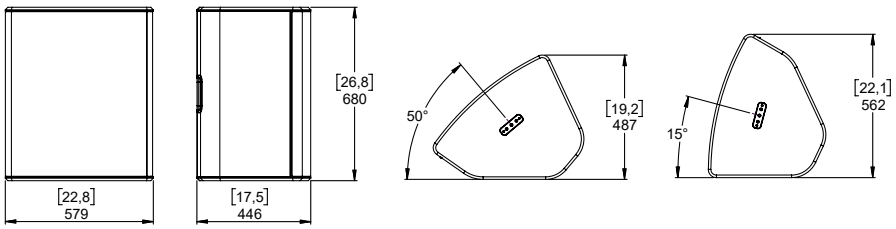

USER NOTES

NEXO S.A.

Parc d'activité de la Dame Jeanne
F-60128 PLAILLY

Tel: +33 3 44 99 00 70
Fax: +33 3 44 99 00 30
E-mail: info@nexo.fr

nexo-sa.com