2026-10-22

DP4335-02c-DI

P10 / P10-TIS

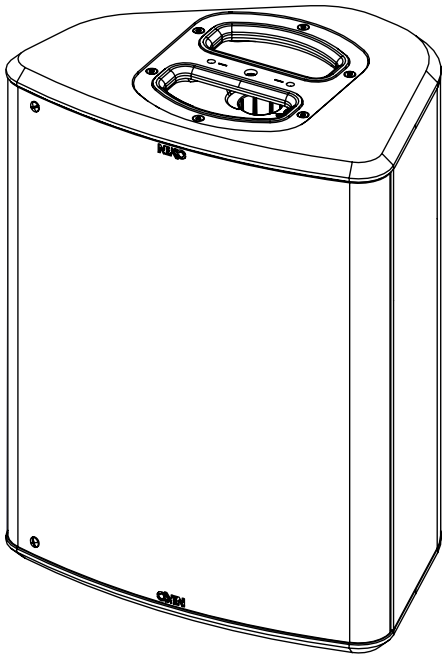

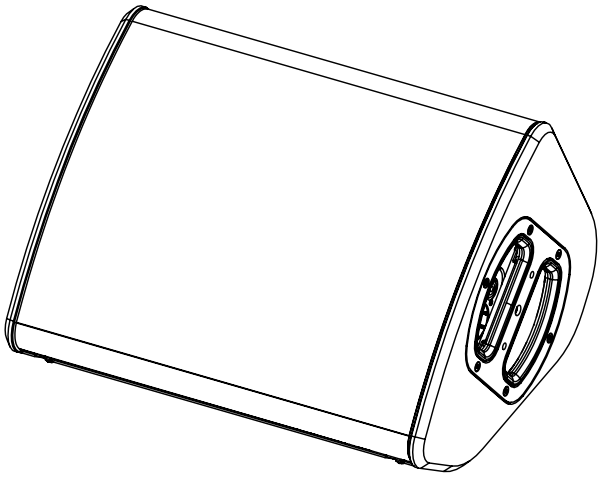

User manual

TABLE OF CONTENTS

TABLE OF CONTENTS 2
WARNINGS 3
EQUIPMENT 4
DESCRIPTION 6
PRESET 7
HF DIRECTIVITY 9
CROSSOVER FREQUENCY 9
ACCESSORIES 10
ARRAY EQ 15
MAINTENANCE 16
TECHNICAL SPECIFICATIONS 18
USER NOTES 19

WARNINGS

PRECAUTIONS

Do not open the speaker, do not try to disassemble it neither to modify it in any way. The system doesn't include any user-repairable part.

If the system seems to be malfunctioning or damaged, stop using it at once and have it repaired by a NEXO qualified technician.

Do not expose the system directly to the sun or to the rain, do not immerse it into fluids, do not place objects filled with liquid on the system. If a liquid gets into the system, please have it inspected by a NEXO qualified technician.

When flying outdoor systems ensure that the system is not exposed to excessive wind or snow loads and is protected from rainfall.

In case of wind greater than 8 on Beaufort scale (72km/h – 45mph), a touring system has to be landed or an additional securing has to be implanted.

For fixed installations, wind loading has to be taken into account in accordance to the national standards

The connection should be performed by qualified technician, by ensuring that power is off.

Operating temperature with temperate climate: 0°C to +40°C (+32°F to +104); -20°C à +60°C (-4°F to +140°F) for storage.

SAFETY INFORMATIONS

Read this manual before using the speaker.

Keep this manual available for further reference.

Observe all warnings and cautions.

Please check the NEXO Web site **nexo-sa.com** to get the most up-to-date version of this manual.

Ensure you are aware of the safety rules applying to rigging, stacking or installing on tripod or speaker stand. Failure to observe these rules may expose persons to potential wounds or even death.

Only use the system with accessories specified by NEXO.

Please always consult a NEXO-accredited technician if the installation needs architectural works and observe following precautions:

Mounting Precautions:

- Please select screws and mounting location supporting 4 times the system weight.
- Do not expose the system to excessive dust, vibrations, to extreme cold or hot temperatures, to reduce the risk of damaging components.
- Do not place the system in an unstable position: it could fall accidentally.
- If the system is used on a tripod, please ensure the tripod's specifications are adapted and that its height does not exceed 1.40m/55". Do not move the tripod with the system in position.

Connection and Powering Precautions:

- Unplug connected cables before moving the system.
- Power off the system before connecting the system.
- When switching on the installation, the amplifier must be powered last; when switching the installation off, shut off the amplifier first.
- If you work by cold temperatures, progressively raise the level to nominal value during the first minutes of use, to allow the system components to stabilize.

Please check regularly the system condition.

HIGH SOUND PRESSURE LEVELS

Exposure to very high sound pressure levels may cause permanent hearing losses. Degrees of hearing losses may be different from one person to another, but almost everybody will be affected if exposed to high sound pressure levels during a long period of time. The OSHA (Occupational Safety and Health Administration) American Agency specified the following maximal exposures:

Number of Hours	Sound Pressure Level (dBA), Slow Response
8	90
6	92
4	95
3	97
2	100
1 ½	102
1	105
½	110
¼ or less	115

WASTE OF ELECTRIC OR ELECTRONIC EQUIPMENT

This symbol on the product or its packaging indicates that this product must not be treated as household waste. Instead, it is your responsibility to hand it over to a designated collection point for the recycling of waste electrical and electronic equipment. By ensuring your waste equipment is recycled, you will help prevent potential negative consequences for the environment and human health, which could appear if this product was not recycled. Recycling helps spare natural resources. For more information about the recycling of this product, please contact your local city office, your household waste disposal service or your reseller.

EQUIPMENT

3 locations for rigging accessories, 1 at the back and one per side.

WARNING: The depth of the M10 thread is 22mm (0.84 inch) on the handles and 13mm (0.5 inch) on the plate at the rear.

On both sides, you'll find a print for speaker stand.

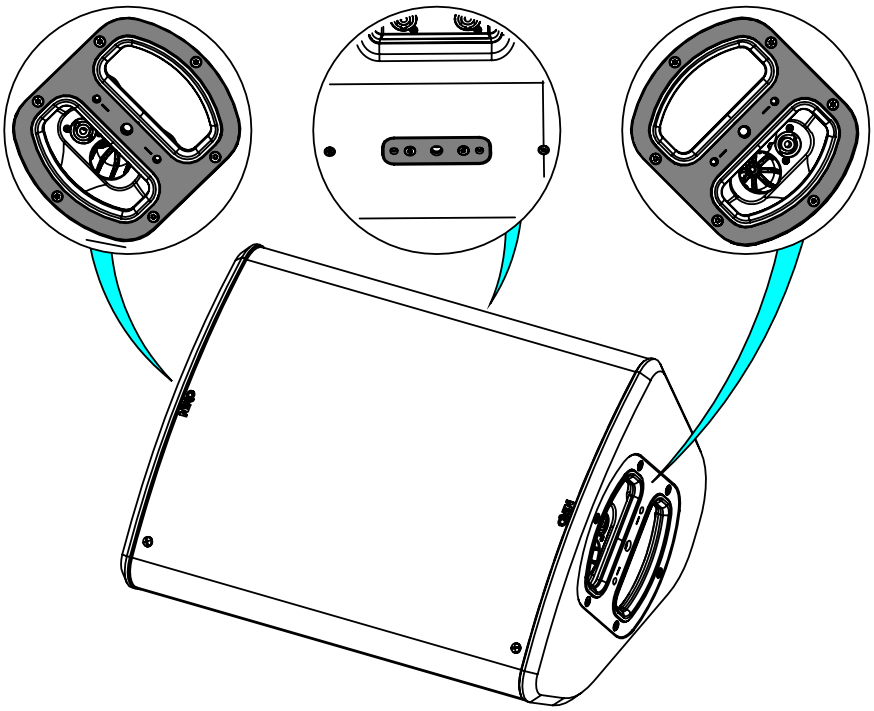

3 locations for connecting, one at the back and one per side.

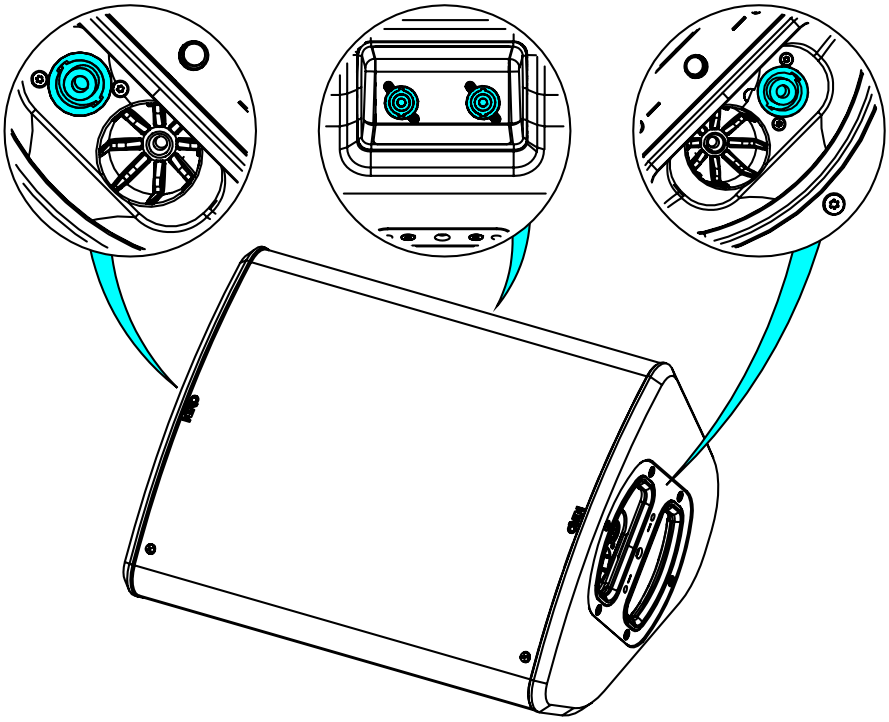

Assembly with pole stand or speaker stand

Fix the pole stand on the connector plate (M20) of the Sub.

Mount P10 on the pole stand / speaker stand (diameter of 35mm),

IMPORTANT

Speaker stand must be rated for P10 weight.

Speaker stand must always be installed on a horizontal surface.

Stand height and footprint must be defined to prevent assembly from collapsing.

Ensure that audience is not allowed within a safety area which radius is equal or higher than assembly height.

Test steadiness of the assembly by pushing in all directions.

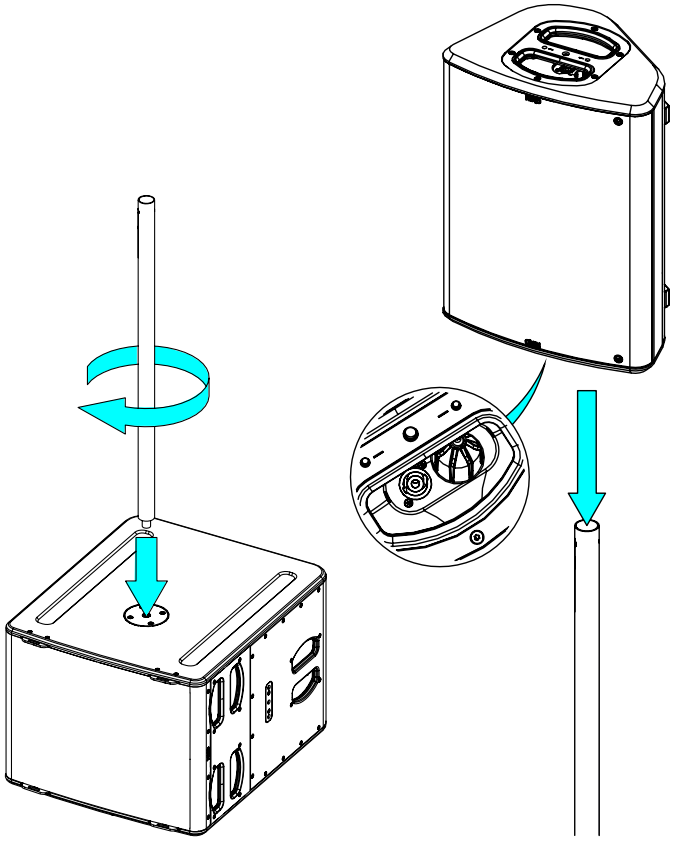

DESCRIPTION

→ The P10 is a compact full-range coaxial speaker

→ Versions:

- P10: for Touring Application; black, white
- P10-TIS: for Touring Applications, with Grille Installation; black, white

→ P10 HF Dispersion:

- 100° – 100° with standard horn
- 110° – 60° with PNU-P10FLG11060

→ P10 can be used alone or with L15 subwoofer

→ The speaker is equipped with four Speakon NL4 connectors with parallel-wired pins, one on each side and two at the back. P10 use 2+/2-. The 1+/1- pins are used by the sub.

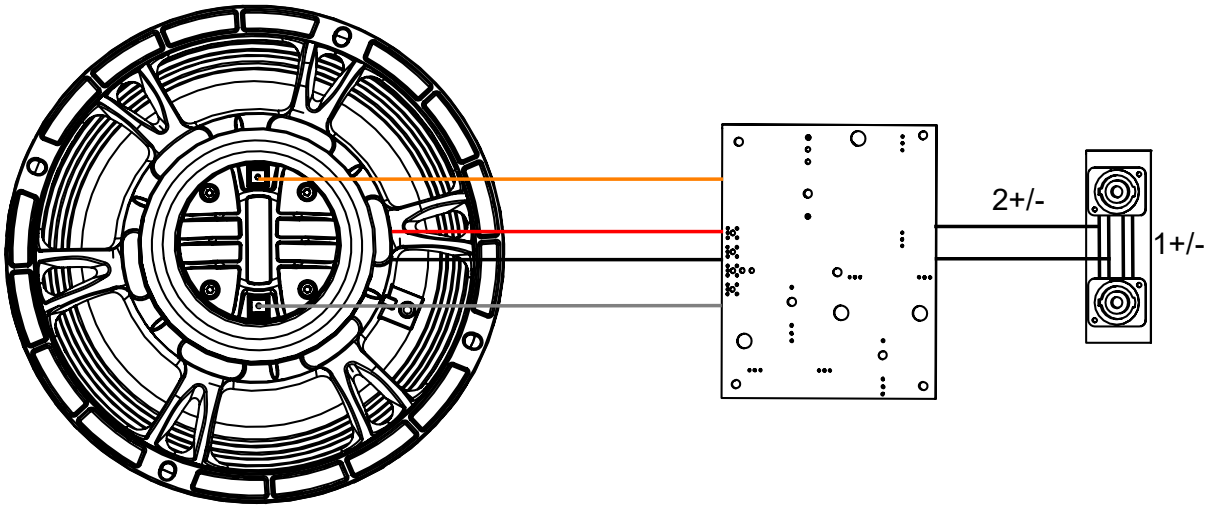

→ Amplification

- The P10 speakers must be used with a NEXO processor to handle EQ, phase alignment, crossover and excursion/thermal protection for the system loudspeaker.
- The following table shows the number of P10 speakers and L15 subwoofers usable with each solution.

	DTD + DTDAMP4X1.3	microNXAMP4X1	NXAMP4X1mk2	NXAMP4X2mk2	NXAMP4X4mk2
P10	Up to 2 per channel	Up to 2 per channel	1 per channel	Up to 4 per channel	Up to 4 per channel
L15	1 per channel	1 per channel	1 per channel	Up to 2 per channel	Up to 2 per channel

PRESET

Please consult nexo-sa.com for NEXO TD Controllers firmware information.

For the P10, the following setups are available:

→ MAIN is the recommended setup for most FOH application.

→ MONITOR is recommended for monitor applications. Warning: this setup is a low latency setup and therefore its phase is not compatible with other NEXO cabinets, including subs.

Preset

- P10 MON PA 100100, with high-pass at 63 or 85 Hz.
- P10 MON PA 11060, with high-pass at 63 or 85 Hz.

- P10 MAIN PA 100100, with high-pass at 63, 85 or 120 Hz.
- P10 MAIN PA 11060, with high-pass at 63, 85 or 120 Hz.

➢ P10

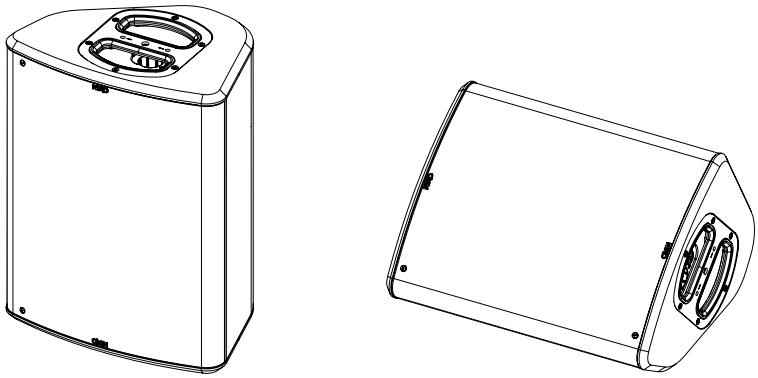

Front of house and stage monitor applications

➢ P10 + Sub

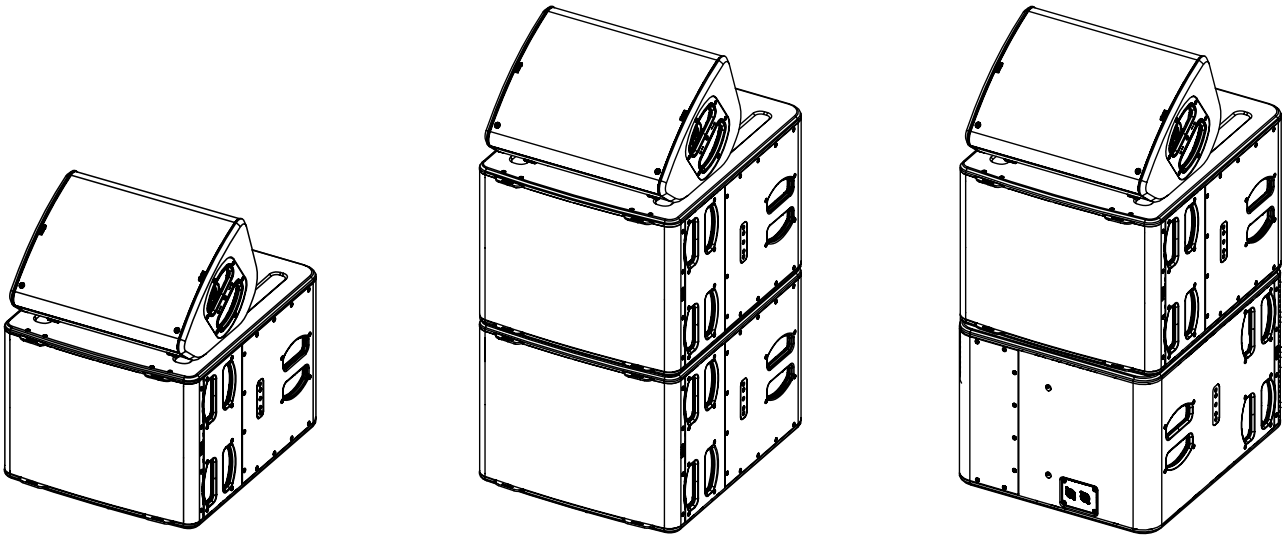

Stage monitor applications with Subs (OMNI or CARDIO modes)

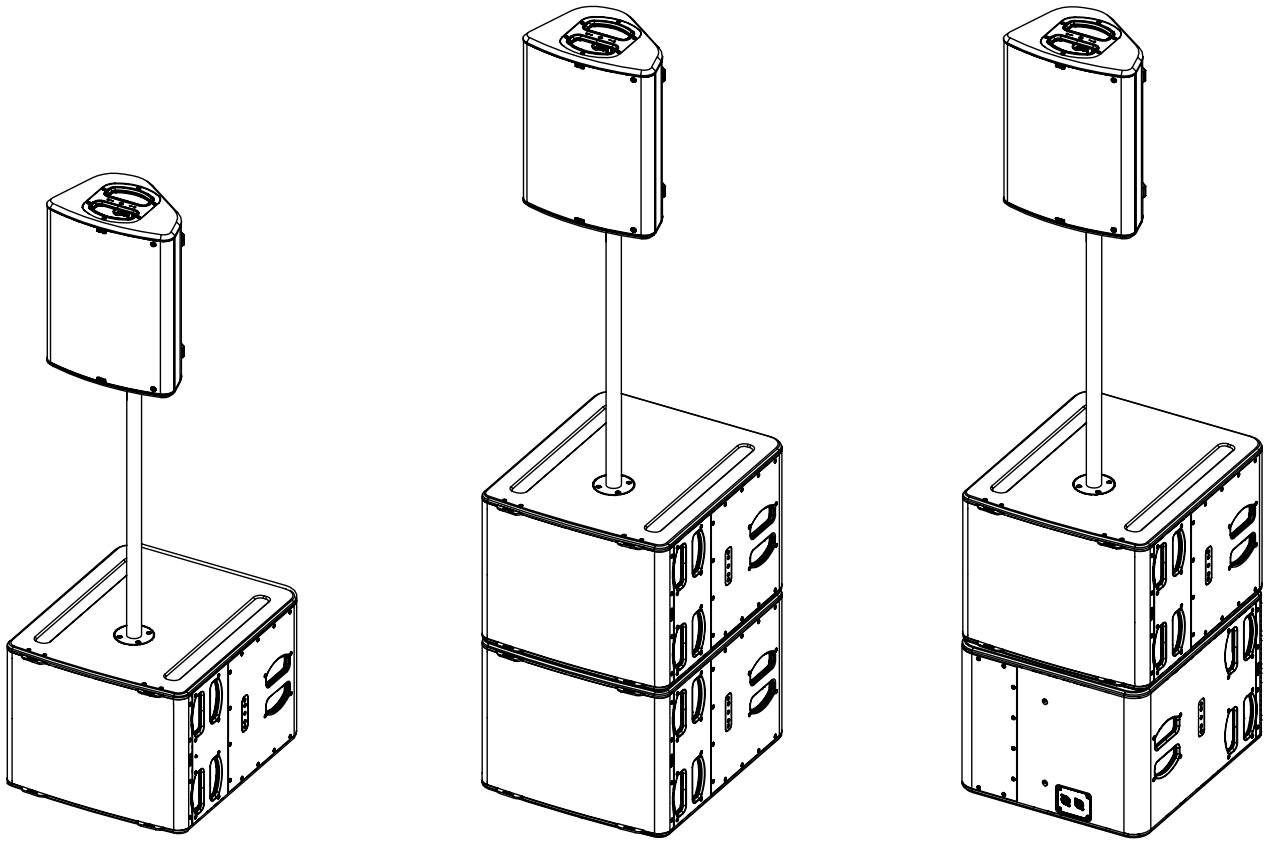

Front of house applications with Subs (OMNI or CARDIO modes)

HF DIRECTIVITY

- → The P10 speaker can be used in horizontal or vertical position.
- → The standard horn is a 100° - 100° HF dispersion. It's easy to change the HF dispersion by changing the horn. Different mounting possibilities and horn rotation allow to deal with every request.

P10 Unlock the 2 quarter-turn screws, Remove the grille.

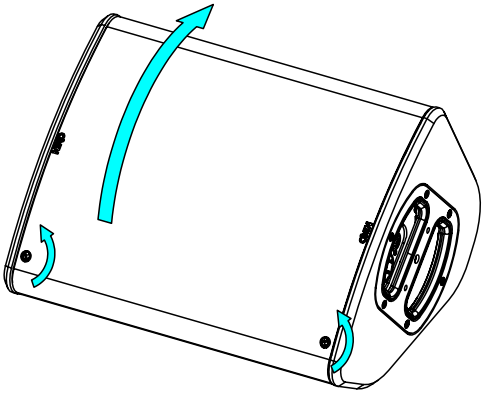

P10-TIS Loosen the 2 screws. Remove the grille.

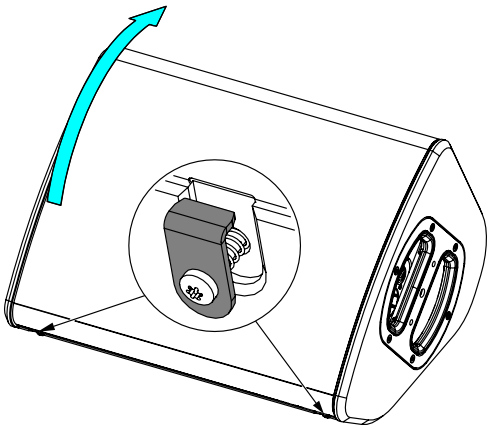

Remove the horn to place the PNT-P10FLG11060.

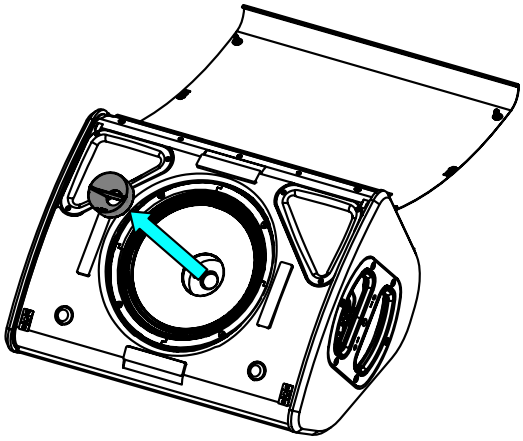

If it necessary, rotate it.

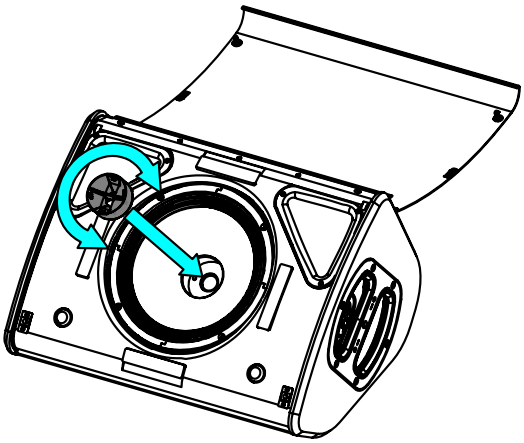

Magnets keep the horn in place.

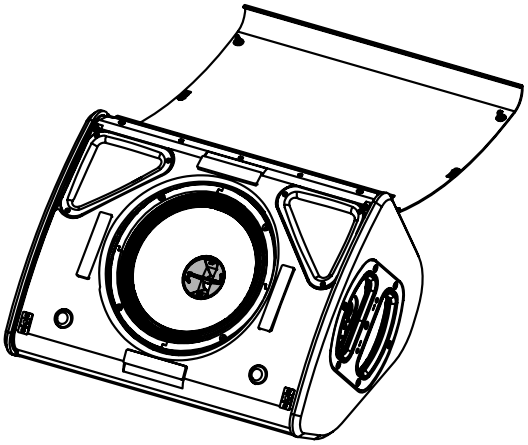

Replacing the grille.

When replacing the grille, ensure it is well positioned in the top blade.

CROSSOVER FREQUENCY

- → 63 Hz: Full range application.
- → 85 Hz: Use as « front fill » on stage, complementing a main system. Use with a NEXO subwoofer, e.g. L15.
- → 120 Hz: Long throw application.

ACCESSORIES

WARNINGS

All P10 accessories are specifically rated in agreement with structural computations.

Never use other accessories – including push-pins – when assembling P10 cabinets than the ones provided by NEXO: NEXO will decline responsibility over the entire P10 accessory range if any component is purchased from different supplier.

PROHIBITED: P10 below P10 or P10 below L15 without dedicated accessory

VNU-BUMP (PNT-BUMP)

LiftBar, use with P10,
LIFTADAPT, WMADAPT.

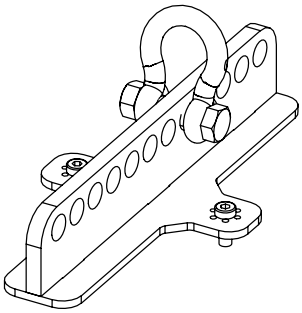

Place VNU-BUMP on P10 (only use the provided screws).
Tight properly

Refer to the Product Data Sheet.

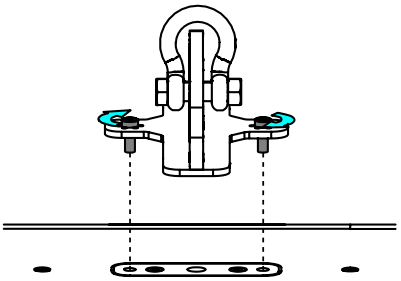

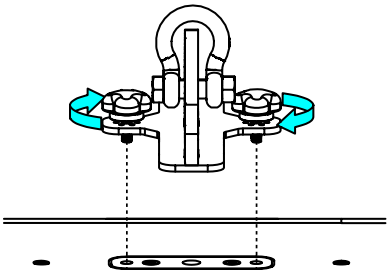

VNT-TCBRK3551

Rotary Truss Clamp

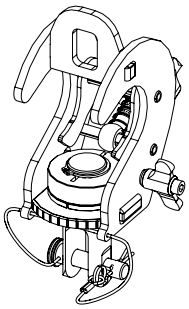

Place VNT-TCBRK3551 on VNU-BUMP at the desired hole.

Refer to the Product Data Sheet

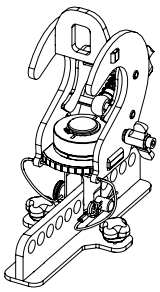

VNU-HBRK500 (PNT-HBRK10)

Horizontal Cradle, use with P10, CLADAPT, PLADAPT.

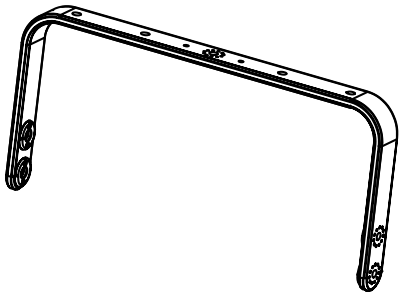

Place HBRK500 on P10, use only fasteners provided.

Tight properly.

Refer to the Product Data Sheet.

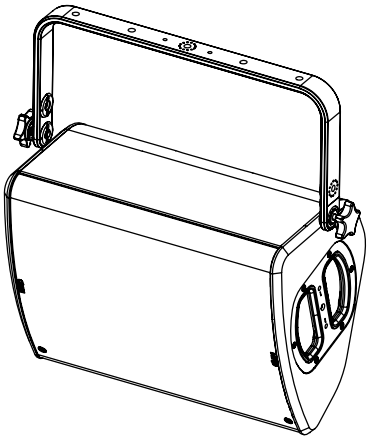

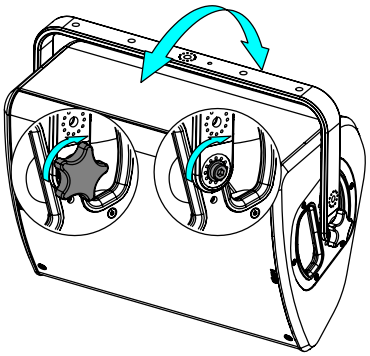

VNU-PLADAPT (PNT-PLADAPT)

Pole adapter, use with P10, HBRK500, VBRK10.

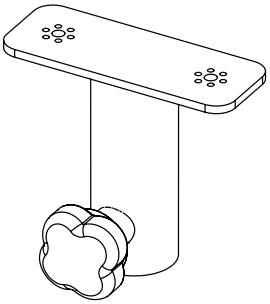

Place VNU-PLADAPT, use only fasteners provided.

Tight properly.

Refer to the Product Data Sheet.

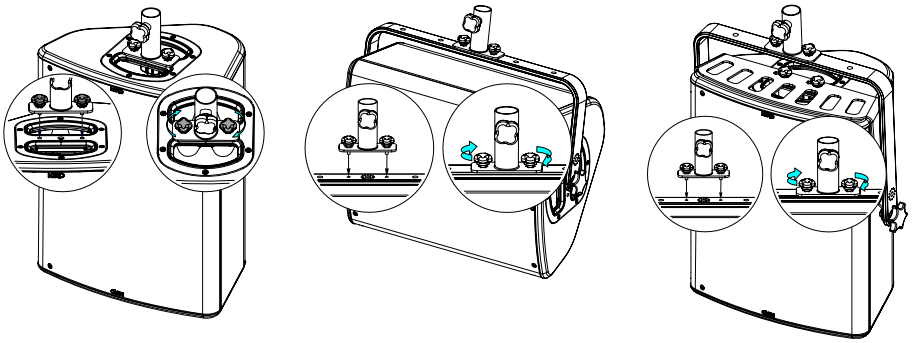

PNU-VBRK10 (PNT-VBRK10)

Vertical Cradle, use with
CLADAPT, PLADAPT.

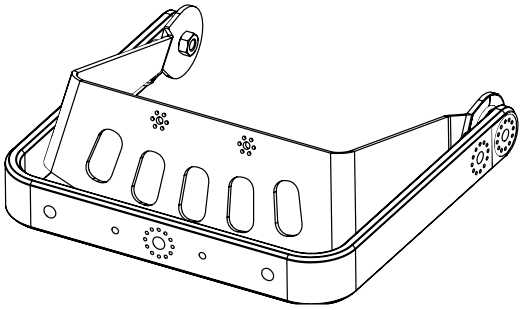

Place VBRK10 on P10, use only fasteners provided.

Tight properly.

Refer to the Product Data Sheet.

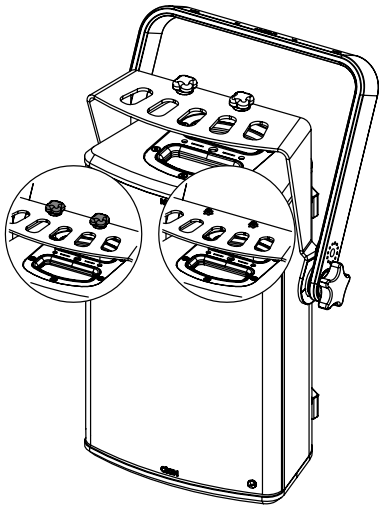

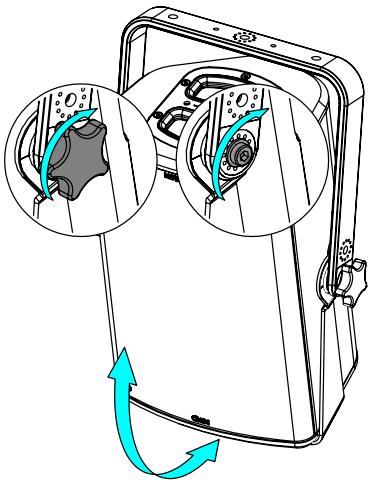

VNT-LIFTADAPT (PNT-WMADAPT)

Adapter, use with
Truss Clamp, VNU-BUMP.

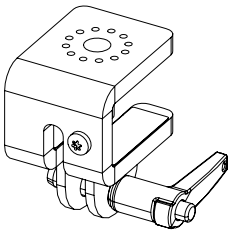

Refer to the Product Data Sheet.

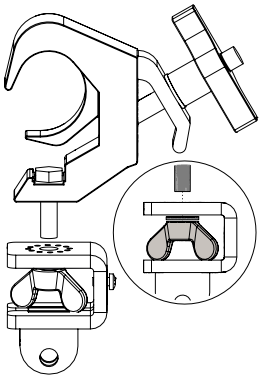

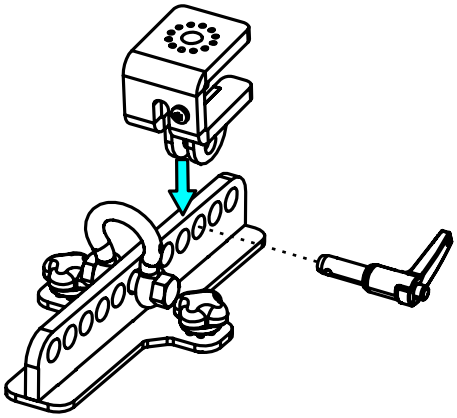

VNI-WMADAPT (PNT-WMADAPT)

Adapter, use with
VNU-BUMP, VNI-WM200.

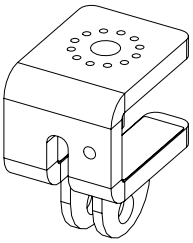

Refer to the Product Data Sheet.

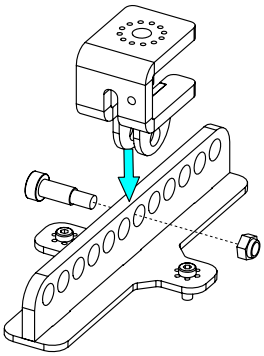

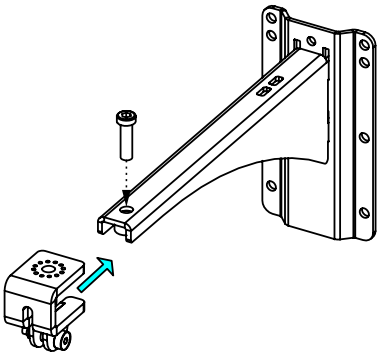

VNI-CLADAPT (PNI-CLADAPT)

Ceiling adapter, use with
VNU-HBRK500, PNU-VBRK10.

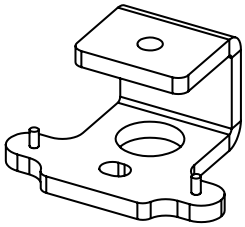

Screw CLADAPT to the ceiling (fasteners not provided).

Place the assembly on CLADAPT, use the 2 guides. Tight with the fasteners provided with CLADAPT.

Refer to the Product Data Sheet.

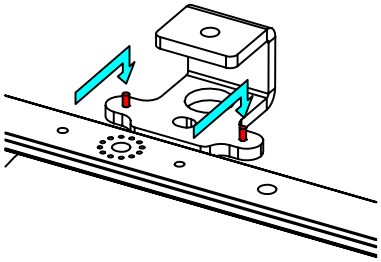

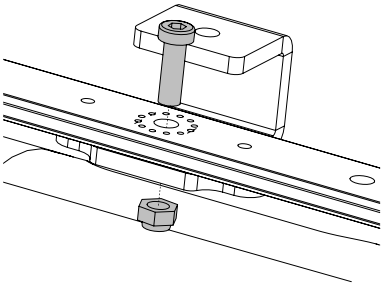

VNI-WM280 (PNI-WM280)

Wallmount for P10, use with WMADAPT.

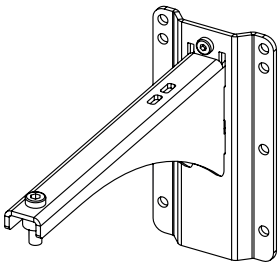

Mount the wall plate. Place the arm in the wall plate.

Lock with the provided screw.

Refer to the Product Data Sheet.

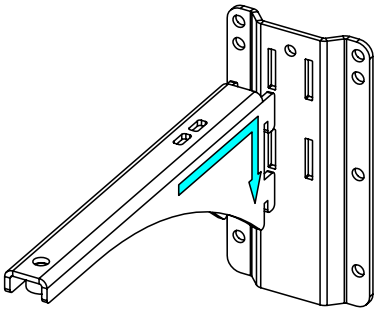

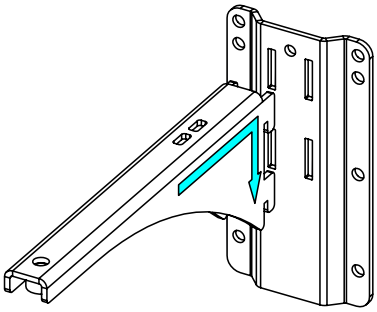

PNU-P10FLG11060
(PNT-P10FLG11060)

HF Dispersion Horn 110° - 60°

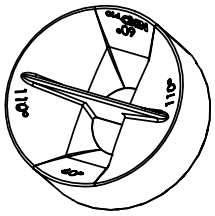

Remove the grille, remove the flange to place the PNU-P10FLG11060.

If it necessary, rotate it. Magnets keep the horn in place.

Refer to the Product Data Sheet.

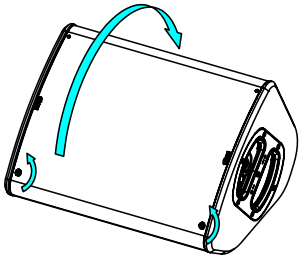

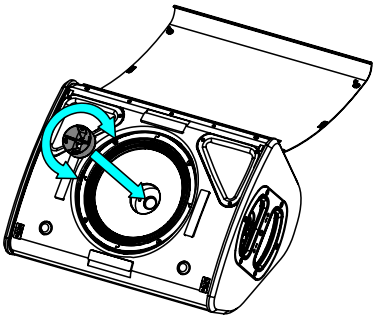

PNT-2CASE10: FLIGHT CASE FOR 2X P10

PNT-ACC10: FLIGHT CASE FOR P10 ACCESSORIES

PNT-COV10: COVER FOR P10

ARRAY EQ

The ArrayEQ allows to adjust the system frequency response in its lower range (see curves below, with different ArrayEq values):

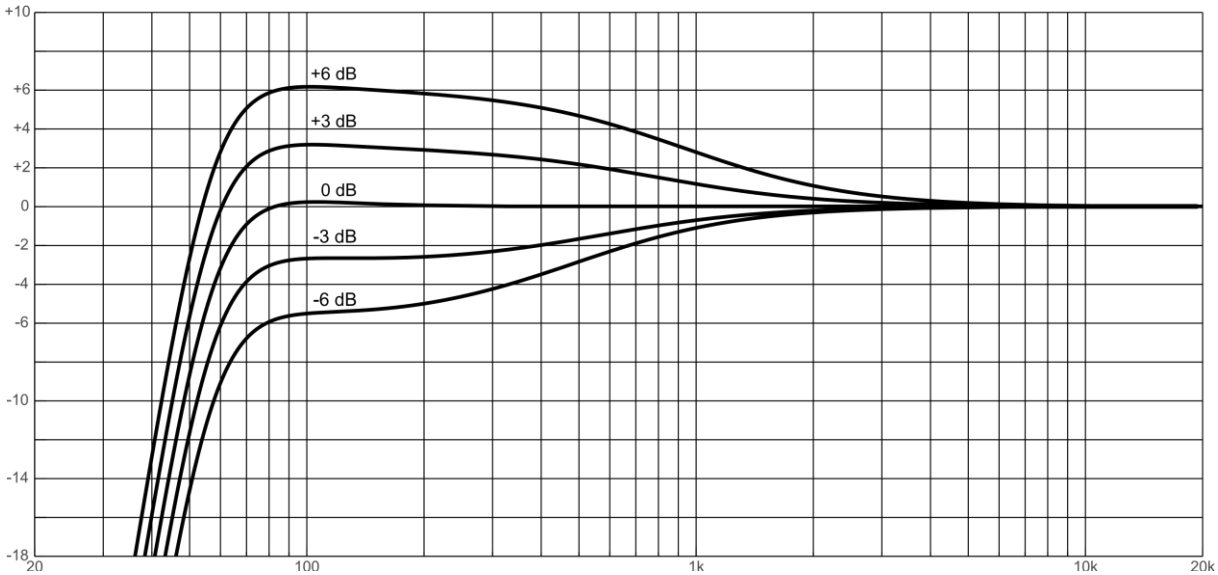

MAINTENANCE

NOTE:

Speakers and Grills can be sent back to NEXO for recycling

Driver access

P10 Unlock the 2 quarter-turn screws, Remove the grille.

(**P10-TIS** see above)

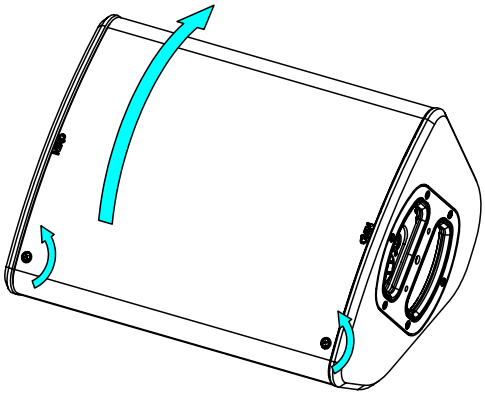

Remove 4 screws.

Tightening torque: 3.5 Nm (Thread Locker: Loctite 242)

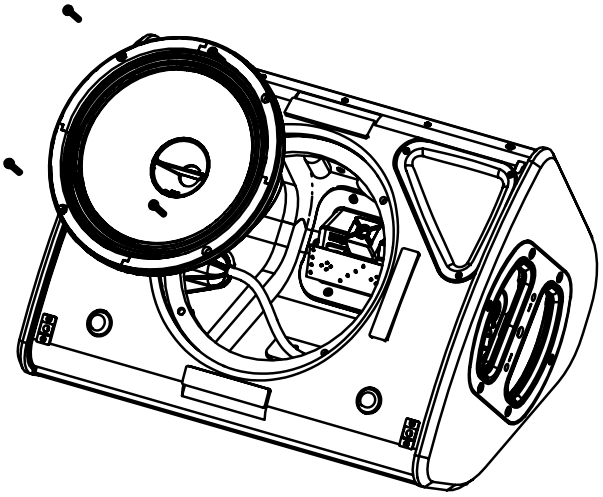

Remove the horn.

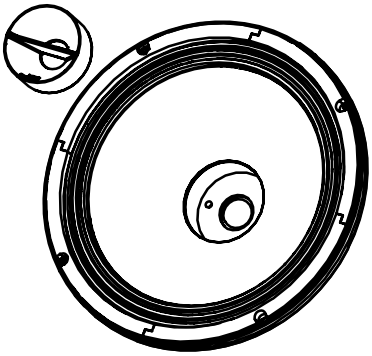

To access to the HF diaphragm, remove 4 screws.

Tightening Torque: 2 Nm

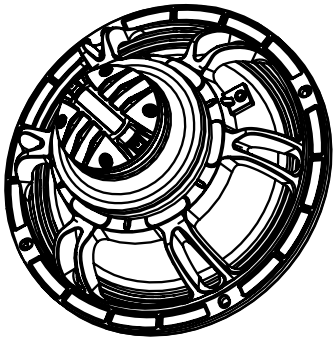

Spare parts

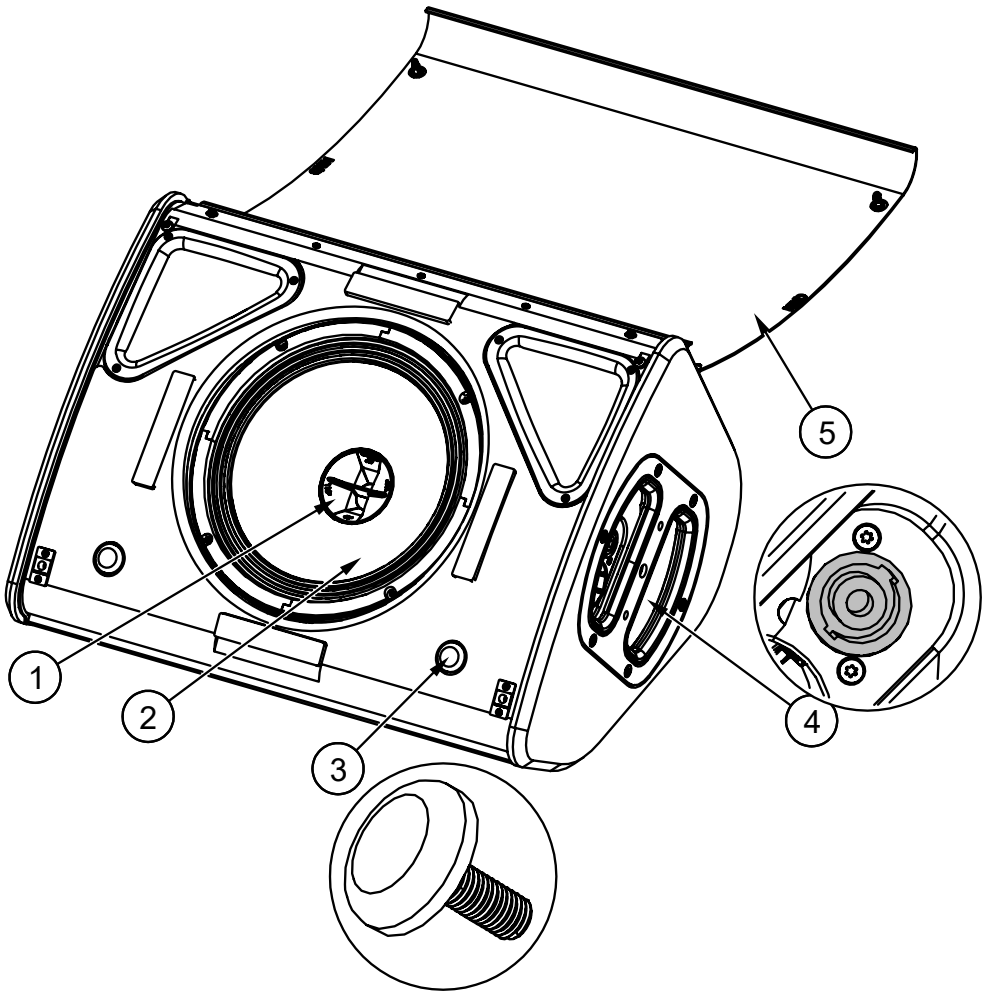

MARK	QUANTITY	REFERENCE	DESIGNATION
1	1	05PAVB10-100-100	HORN 100°-100°
	1	04PNT-P10FLG11060	HORN 110°-60°
2	1	05HPC10	P10 driver complete (with screws)
	1	05HPC10R/K	Recone Kit 10” (with screws)
	1	05NHP10R/K	HF diaphragm (with screws)
3	2	05RUBGRD01	Plastic Pad Black
	2	05RUBGRD01-PW	Plastic Pad White
4	2	05SPK01	Speakon NL4 complete (with screws)
5	1	05P10UA	Complete grille Touring Black (with fasteners)
	1	05P10UA-PW	Complete grille Touring White (with fasteners)
	1	05P10UA-I	Complete grille Instal Black (with fasteners)
	1	05P10UA-IPW	Complete grille Instal White (with fasteners)

TECHNICAL SPECIFICATIONS

P10 WITH NEXO ELECTRONICS

Model	P10
Frequency range (±6dB)	63 Hz – 20 kHz
Peak SPL Level (1m)	136dB Peak
Operating voltage	50Vrms (150Vpeak)
HF dispersion (according to horns)	100°x100° (Default) - 110°x60° (Optional)
Crossover Frequency	63Hz – 85Hz – 120Hz
Nominal Impedance	8Ω

SPECIFICATIONS

Model	P10
Components	1 x Coaxial Neodymium LF 10” - 8Ω long excursion & HF 1.7‘’ - 8Ω
Material	Custom made bent plywood of Baltic birch and poplar
Finish	Black or white structural paint
Front finish	P10: Magnelis® steel front grille + Back mesh P10-TIS: Black or white acoustic fabric fitted front Magnelis® front grille
Fittings	Handle on both sides Threated inserts on the back and on both sides for connection of mounting accessories Stand fitting on both sides (35mm / 1”3/8)
Connector	4x NL4, 4 poles connectors; 2 at the back and one on each side
Weight	15 kg / 33 lb
Dimensions	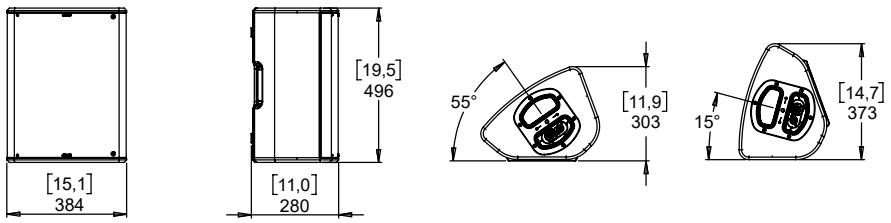

USER NOTES

NEXO S.A.

Parc d'activité de la Dame Jeanne
F-60128 PLAILLY

Tel: +33 3 44 99 00 70
Fax: +33 3 44 99 00 30
E-mail: info@nexo.fr

nexo-sa.com