2026-10-22

MSUB18

NEXO

DP2820-01d-DI

MSUB18-I

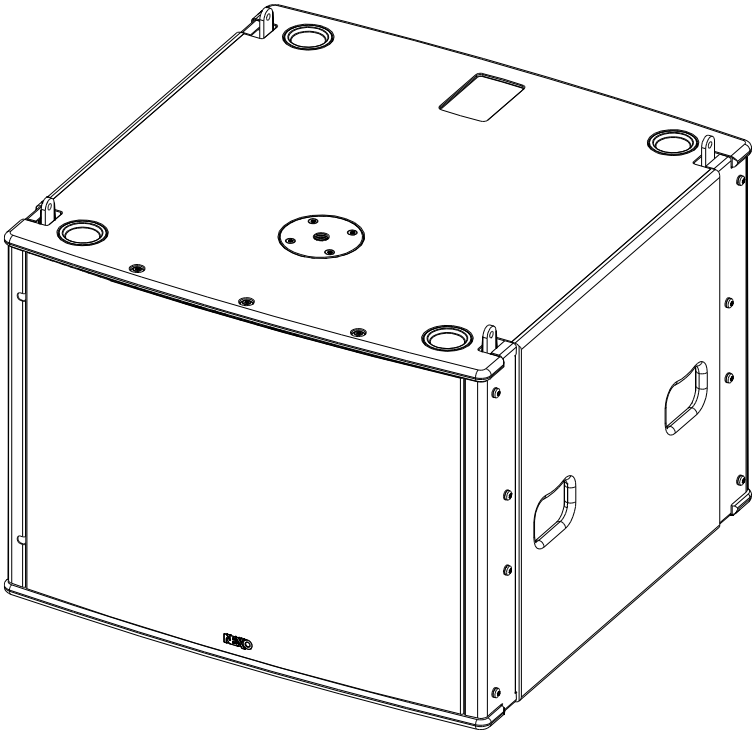

User Manual

IP54

TABLE OF CONTENTS

TABLE OF CONTENTS 2
WARNINGS 3
DESCRIPTION 4
SETTING RANGE 6
MSUB18 RIGGING 11
MSUB18 - ACCESSORIES 12
ARRAY EQ 14
MAINTENANCE 15
TECHNICAL SPECIFICATIONS 17
USER NOTES 18

WARNINGS

PRECAUTIONS

Do not open the speaker, do not try to disassemble it neither to modify it in any way. The system doesn't include any user-repairable part.

If the system seems to be malfunctioning or damaged, stop using it at once and have it repaired by a NEXO qualified technician.

Do not expose the system directly to the sun or to the rain, do not immerse it into fluids, do not place objects filled with liquid on the system. If a liquid gets into the system, please have it inspected by a NEXO qualified technician.

When flying outdoor systems ensure that the system is not exposed to excessive wind or snow loads and is protected from rainfall.

In case of wind greater than 8 on Beaufort scale (72km/h – 45mph), a touring system has to be landed or an additional securing has to be implanted.

For fixed installations, wind loading has to be taken into account in accordance to the national standards

The connection should be performed by qualified technician, by ensuring that power is off.

Operating temperature with temperate climate: 0°C to +40°C (+32°F to +104); -20°C à +60°C (-4°F to +140°F) for storage.

SAFETY INFORMATIONS

Read this manual before using the speaker.

Keep this manual available for further reference.

Observe all warnings and cautions.

Please check the NEXO Web site **nexo-sa.com** to get the most up-to-date version of this manual.

Ensure you are aware of the safety rules applying to rigging, stacking or installing on tripod or speaker stand. Failure to observe these rules may expose persons to potential wounds or even death.

Only use the system with accessories specified by NEXO.

Please always consult a NEXO-accredited technician if the installation needs architectural works and observe following precautions:

Mounting Precautions:

- Please select screws and mounting location supporting 4 times the system weight.
- Do not expose the system to excessive dust, vibrations, to extreme cold or hot temperatures, to reduce the risk of damaging components.
- Do not place the system in an unstable position: it could fall accidentally.
- If the system is used on a tripod, please ensure the tripod's specifications are adapted and that its height does not exceed 1.40m/55". Do not move the tripod with the system in position.

Connection and Powering Precautions:

- Unplug connected cables before moving the system.
- Power off the system before connecting the system.
- When switching on the installation, the amplifier must be powered last; when switching the installation off, shut off the amplifier first.
- If you work by cold temperatures, progressively raise the level to nominal value during the first minutes of use, to allow the system components to stabilize.

Please check regularly the system condition.

HIGH SOUND PRESSURE LEVELS

Exposure to very high sound pressure levels may cause permanent hearing losses. Degrees of hearing losses may be different from one person to another, but almost everybody will be affected if exposed to high sound pressure levels during a long period of time. The OSHA (Occupational Safety and Health Administration) American Agency specified the following maximal exposures:

Number of Hours	Sound Pressure Level (dBA), Slow Response
8	90
6	92
4	95
3	97
2	100
1 ½	102
1	105
½	110
¼ or less	115

WASTE OF ELECTRIC OR ELECTRONIC EQUIPMENT

This symbol on the product or its packaging indicates that this product must not be treated as household waste. Instead, it is your responsibility to hand it over to a designated collection point for the recycling of waste electrical and electronic equipment. By ensuring your waste equipment is recycled, you will help prevent potential negative consequences for the environment and human health, which could appear if this product was not recycled. Recycling helps spare natural resources. For more information about the recycling of this product, please contact your local city office, your household waste disposal service or your reseller.

DESCRIPTION

→ The MSUB18-I is a compact high technology arrayable sub, the ideal companion for the GEOM12 line array element, sharing same aesthetic design and arrayable in the same flown or stacked cluster.

→ Versions:

- MSUB18-I: for fix applications; Black
- MSUB18-PW: for fix applications; White

→ Connectors:

- 2 fast connectors in front and back. Seal your connections for an outdoor use (with the kit provided)
- **(+): Red / (-): Black**

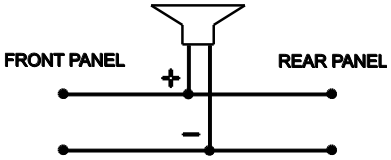

→ MSUB18-I Sealing:

You can find 2 locations to wire MSUB18-I. Choose how you wire the MSUB18-I and apply the followings procedures.	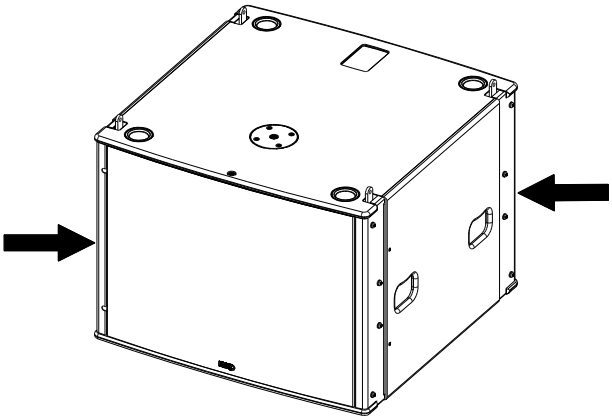

Unused side:

Put the heat-shrink cap on the cable. Use a hot air to shrink it down.		

Used side:

Pop the lever open. (+) : Brown (or Red) (-) : Blue (or Black)	Push your wire in (strip about 10 mm) and clamp the lever closed again. Repeat for the second connector.	Place the heat-shrinkable tubing on the connector. Use a hot air to shrink down the sheath.
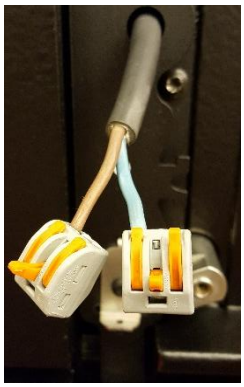	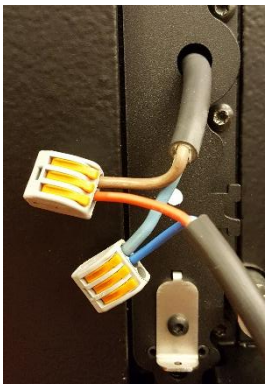	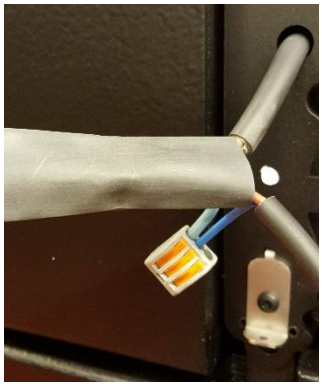
Bend the sheath and hold it with a clamp.	Repeat for the second connector. Attach them together to the rigging part. Sheaths upwards.	Guide the cable through the entry (up and/or down).
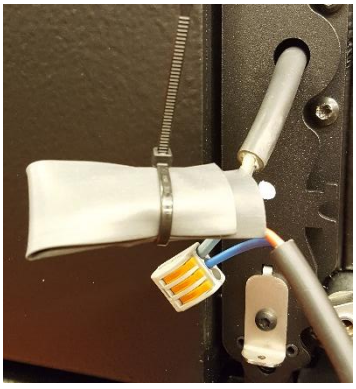		

→ Amplification:

- The MSUB18 must be used with a NEXO processor to handle EQ, phase alignment, crossover and excursion/thermal protection for the system loudspeakers.
- The following table shows the number of MSUB18 subwoofers usable with each solution.

	microNXAMP4x1	NXAMP4x1MK2 (bridged)	NXAMP4x2MK2	NXAMP4x4MK2
MSUB18	1 per bridged channel	1 per channel	1 per channel	Up to 2 per channel
				Recommended

SETTING RANGE

Please consult nexo-sa.com for NEXO TD Controllers firmware information.

There are two setting ranges for surrounding speaker MSUB18:

→ « OMNI » setups; For a traditional use of the subwoofer in omnidirectional radiation (require at least one subwoofer and a channel of amplifier).

- Omnidirectional Main setup, with low-pass at 50, 60, 75, 85, 95 or 120 Hz.
- Omnidirectional Monitor setup, with low-pass at 60, 75 or 85 Hz.

→ « CARDIO » setups; For a directional use (cardioid) of subwoofers (require at least two subwoofers and two channels of amplifier):

- Cardioid back and front setups, with low-pass at 65, 75, 85, 95 or 120 Hz.
  - Setup « FR » (Front) for the subwoofer pointed at the audience.
  - Setup « BA » (Back) for the subwoofer turned around.
- The ideal ratio for a directional use is 2 x MSUB18 in CARDIO FRONT mode on top of 1x Reversed MSUB18 in CARDIO BACK mode. From 1:1 to 4:1 ratio can be used

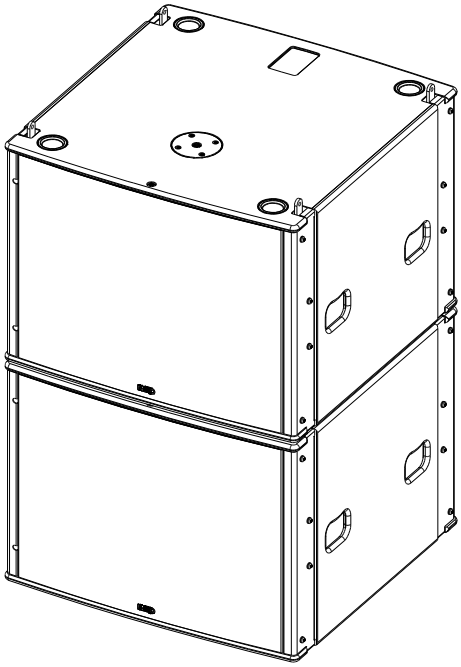

« OMNI » Assembly

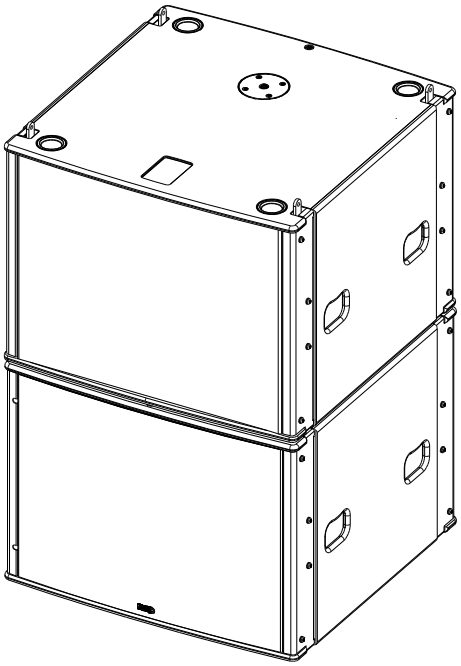

« CARDIO » Assembly

➢ With 1 to 3 GEOM12

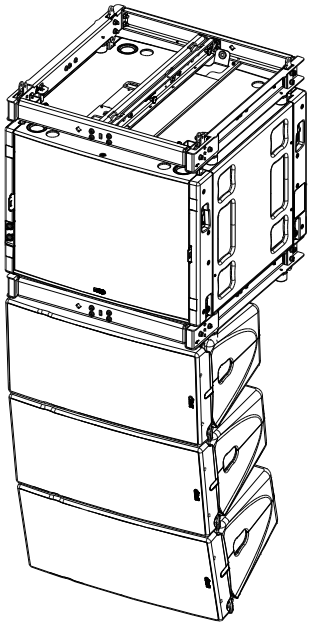

(View with MSUB18 touring)

For these configurations, crossover frequency 85 Hz is recommended (85 Hz also for GEOM12).

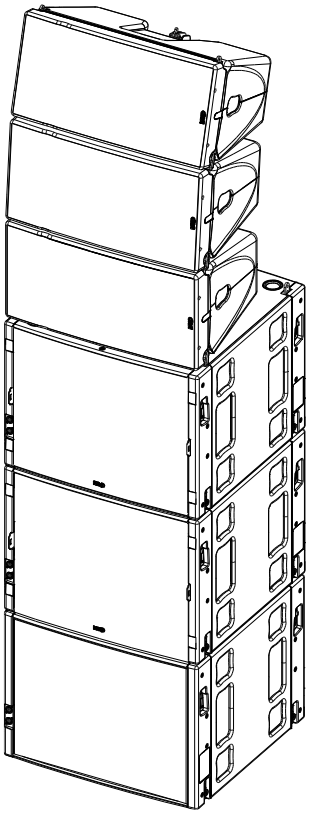

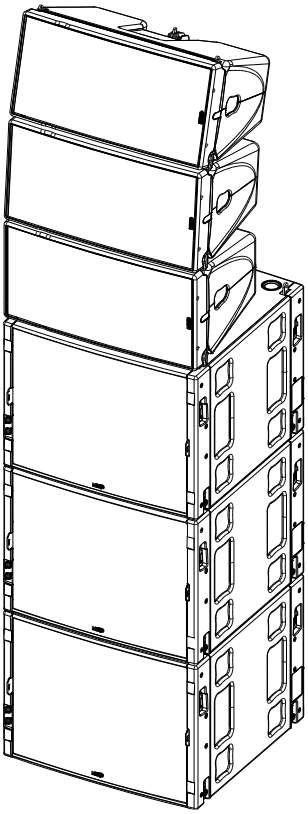

(View with MSUB18 touring)

For stack configuration using MSUB18 in OMNI or CARDIO mode with 1 Back and 2 Front ang GEOM12 on top of them, crossover 85 Hz is recommended (85 Hz also for GEOM12). A small overlap could have impact if needed, for example (MSUB18 120 Hz and GEOM12 75 Hz).

➢ With 4 to 6 GEOM12

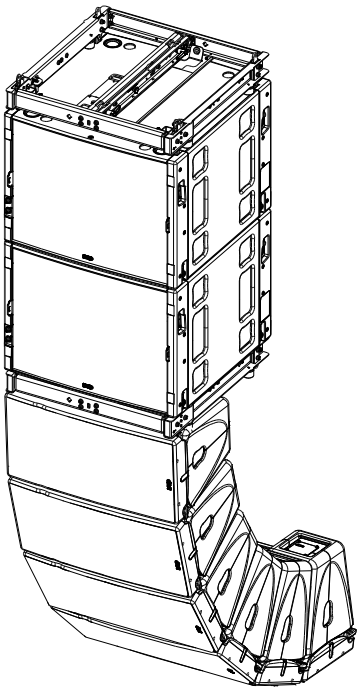

(View with MSUB18 touring)

For long throw application, crossover 95 Hz is recommended (OMNI mode).

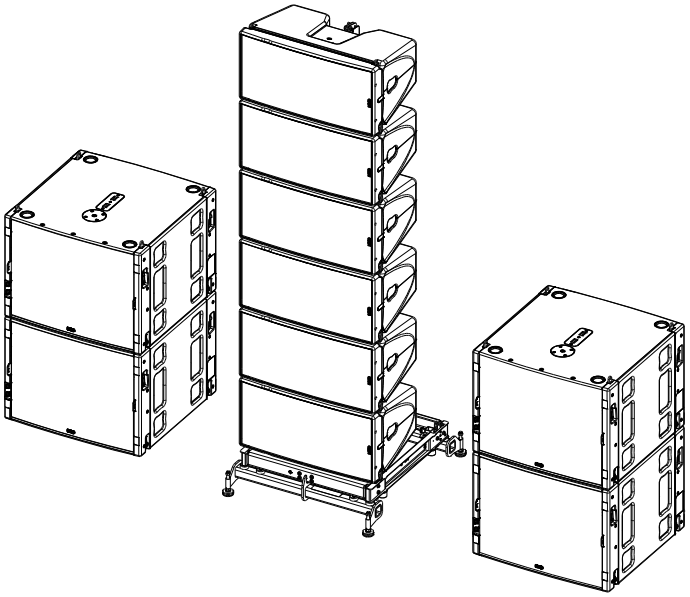

(View with MSUB18 touring)

For long throw stacking application, up to 6 GEOM12, crossover 85 Hz is recommended on MSUB18 (also for GEOM12).

➢ With 7 to 12 GEOM12

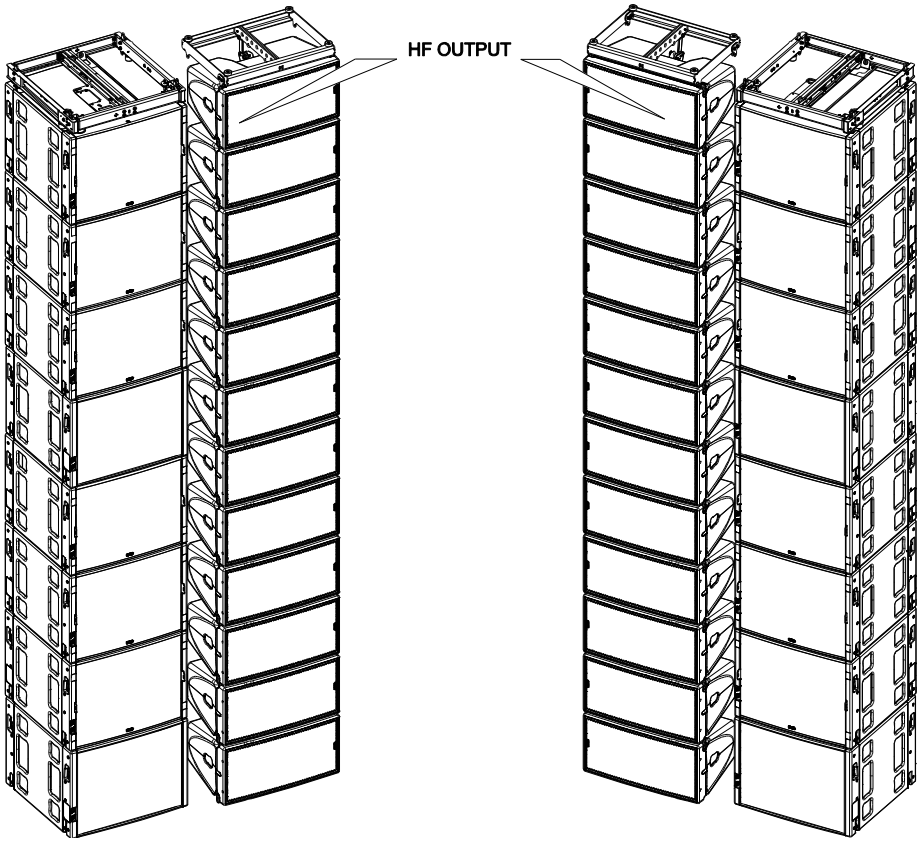

(View with MSUB18 touring)

For very long throw application, with flown or stacked MSUB18, recommended MSUB18 cardioid mode, crossover MSUB18 95 Hz and 12 GEOM12 crossover 75 Hz for the maximum impact.

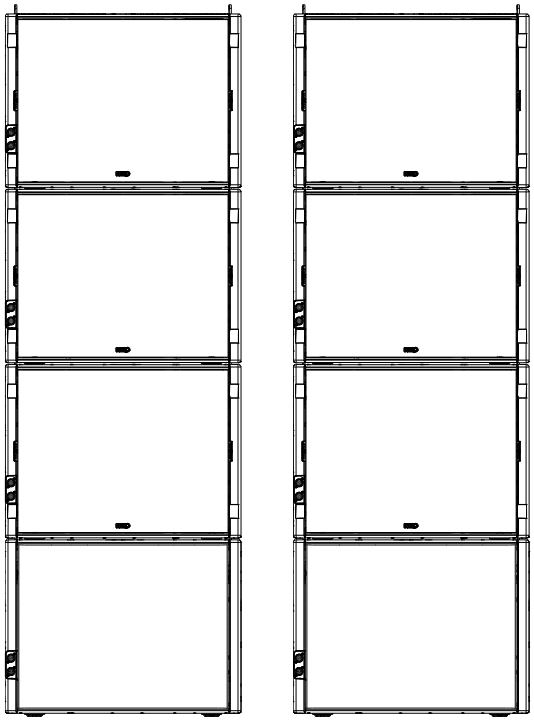

Ground Stack Sub design

➢ With STM-M28

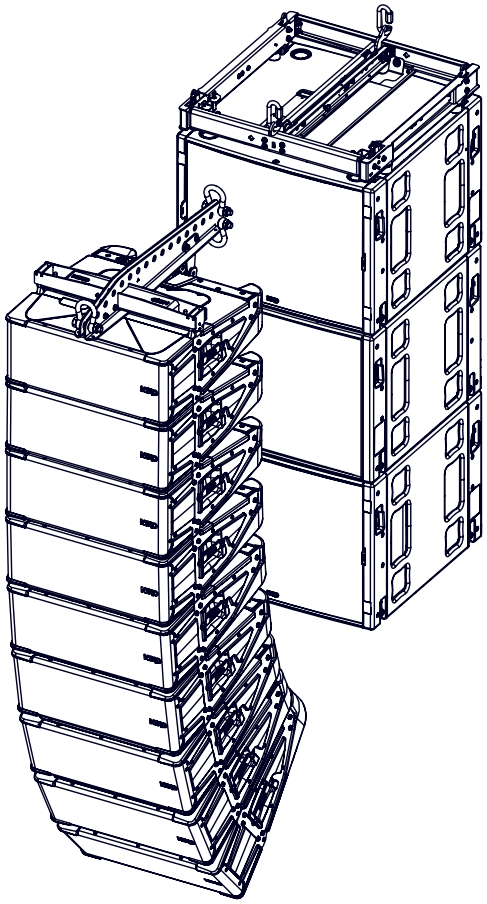

(View with MSUB18 touring)

MSUB18 RIGGING

Open the 4 bumpers (Tx30)

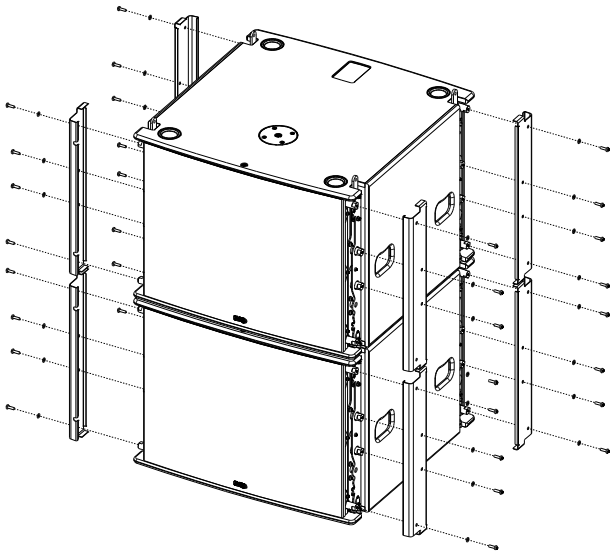

Insert the axis, positionning the pin and secure by bending the legs.

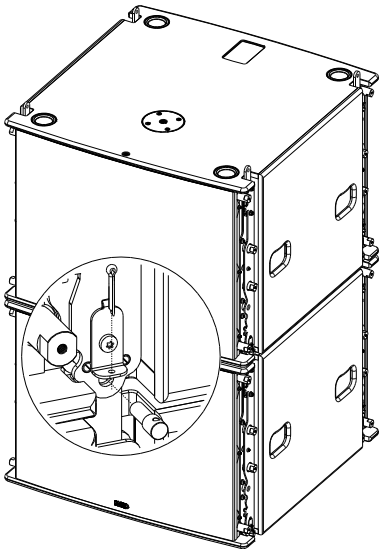

MSUB18 - ACCESSORIES

WARNINGS

All MSUB18 accessories are specifically rated in agreement with structural computations.

Never use other accessories – including push-pins – when assembling MSUB18 cabinets than the ones provided by NEXO: NEXO will decline responsibility over the entire MSUB18 accessory range if any component is purchased from different supplier.

All MSUB18 accessories have been designed so that cabinet are arrayed vertically.

VNI/VNT-BUMPM12

Rated for a maximum of 12 GEOM12 or 8 MSUB18, or a combination with a maximum of 4 MSUB18 and 6 GEOM12.

Flown on 2 rigging points with retractable rings.

Usable with VNT-EXBARM12 for extra tilt angle and flown on one or two rigging points.

Ground stack assembly alone, or with VNT-GSTKM10M12S / VNT-GSTKM10M12L for adding stability.

.

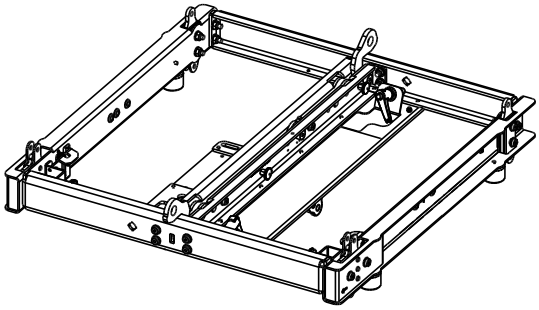

Refer to the Product Data Sheet

NO TILT – MSUB18 MUST ALWAYS BE POSITIONNED STRAIGHT AND ON THE TOP THE ARRAY

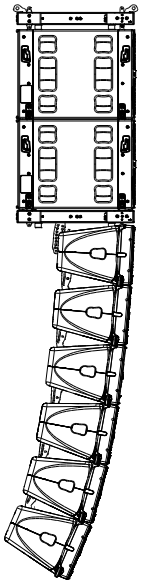

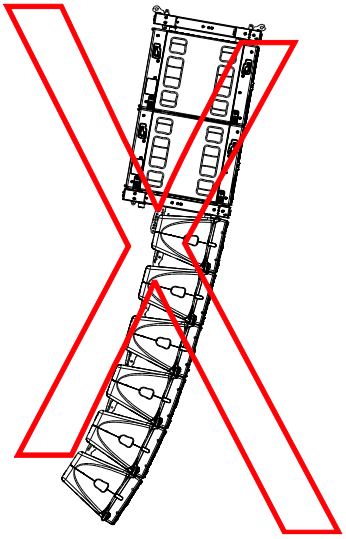

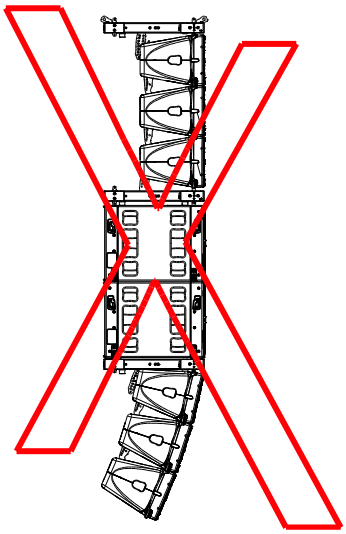

VNT-EXBARM12

Extension bar for VNI/VNT-BUMPM12

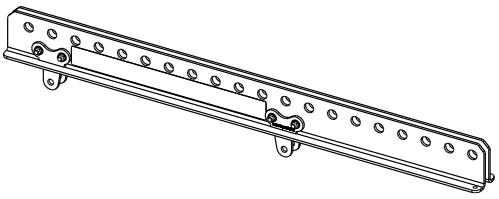

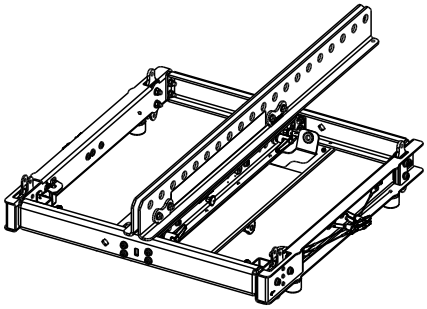

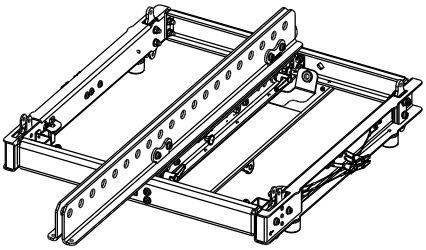

Refer to the Product Data Sheet

VNT-GSTKM10M12S

VNT-GSTKM10M12L

Stacking accessories for MSUB18 on VNI/VNT-BUMPM12

Refer to the Product Data Sheet

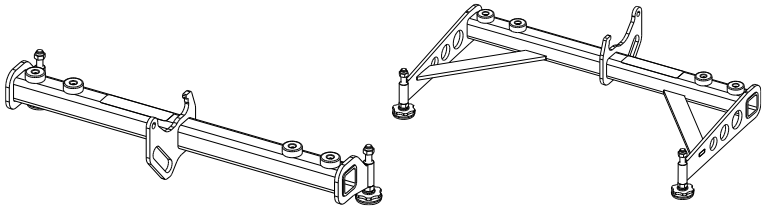

VNT-TCBRK3551

Rotary Truss Clamp

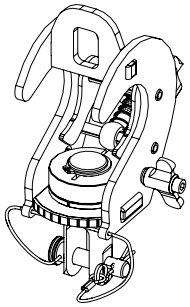

Place VNT-TCBRK3551 on VNT-EXBARM12 at the desired hole.

Refer to the Product Data Sheet

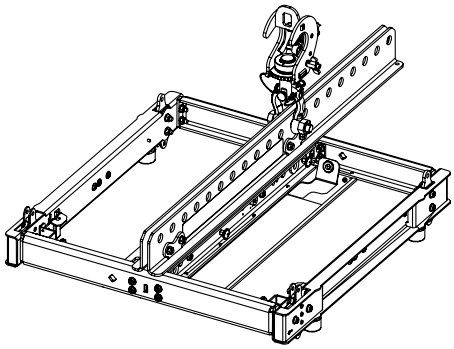

ARRAY EQ

The ArrayEQ allows to adjust the system frequency response in its lower range (see curves below, with different ArrayEQ values):

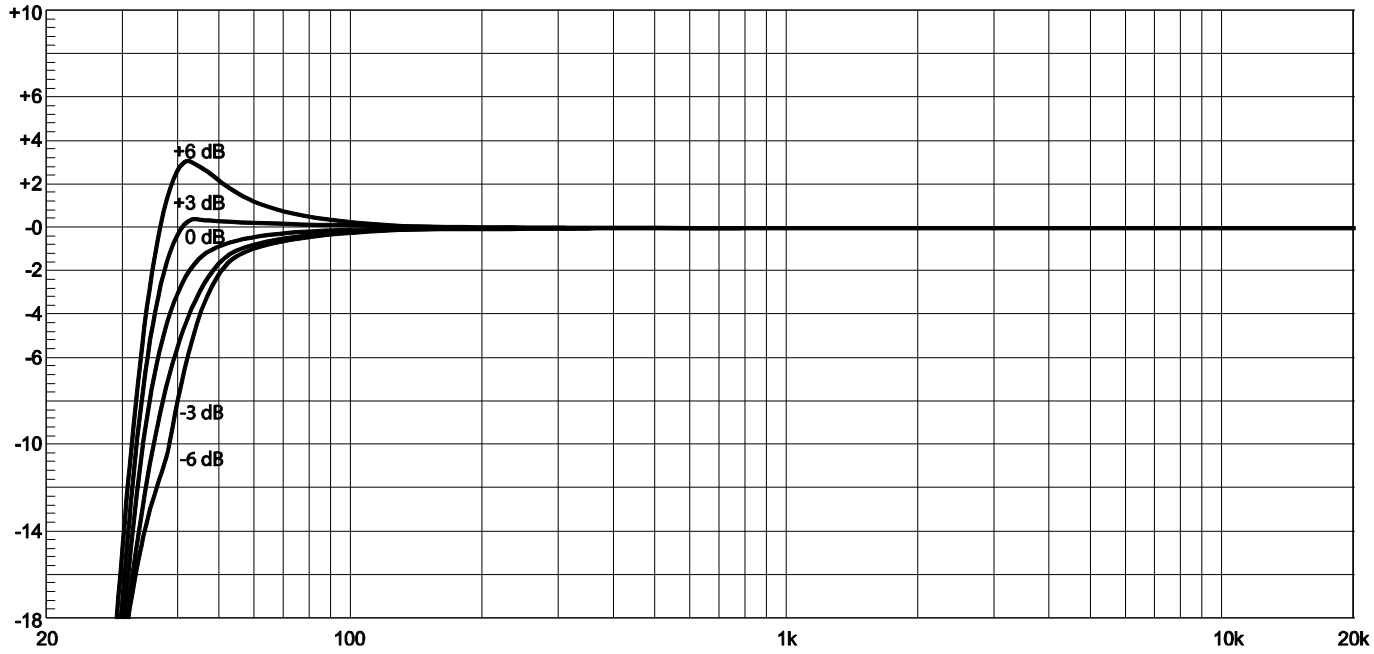

MAINTENANCE

Grille changing

Remove 8 screws (Tx30) and the bumper.	Remove 12 screws (TX25) on the side, top and below to remove the grille.
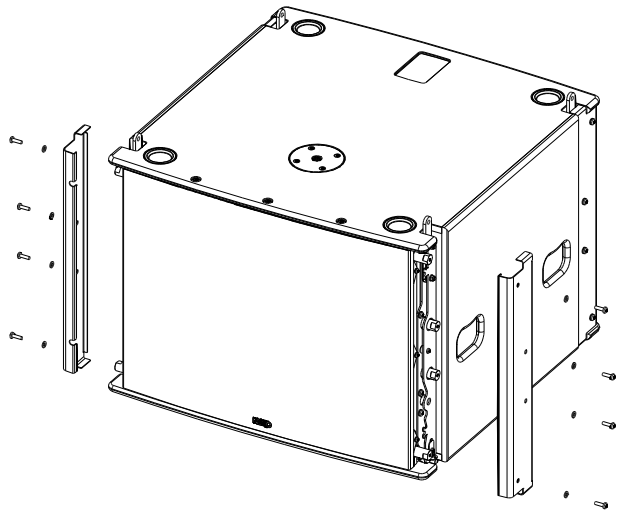	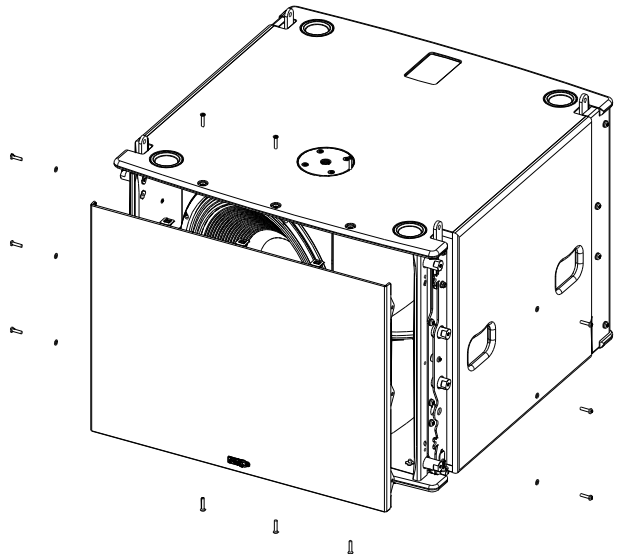

18’’ Driver

Remove 8 screws (Tx25) to remove the Driver. If you remove the side rigging and untighten the cable gland, you have 2 windows to access 2 screws (not mandatory).	To remove the driver, pull and swing it towards you.
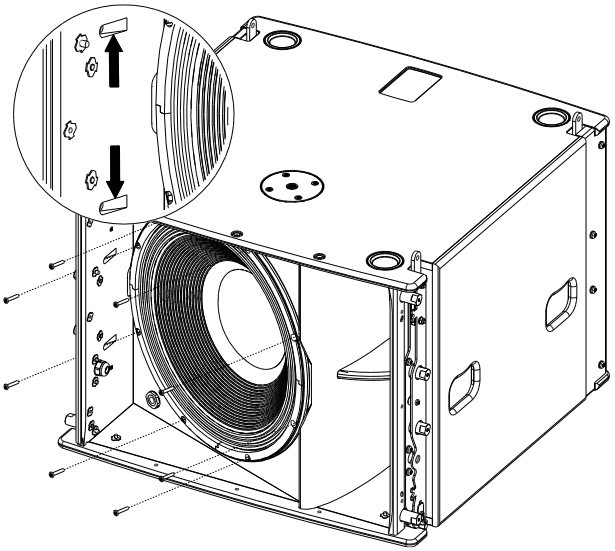	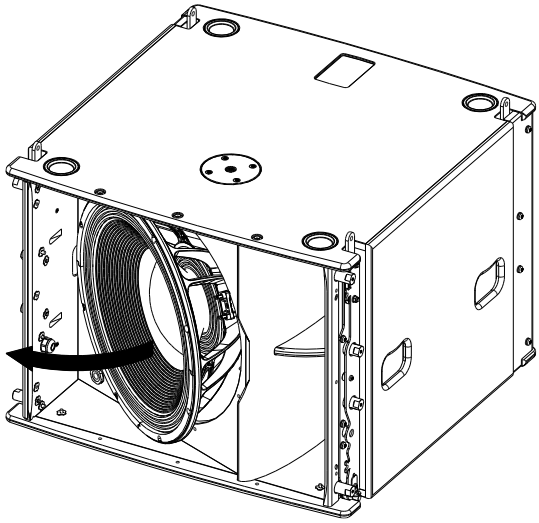

Red (+) / Black (-)

Spare parts

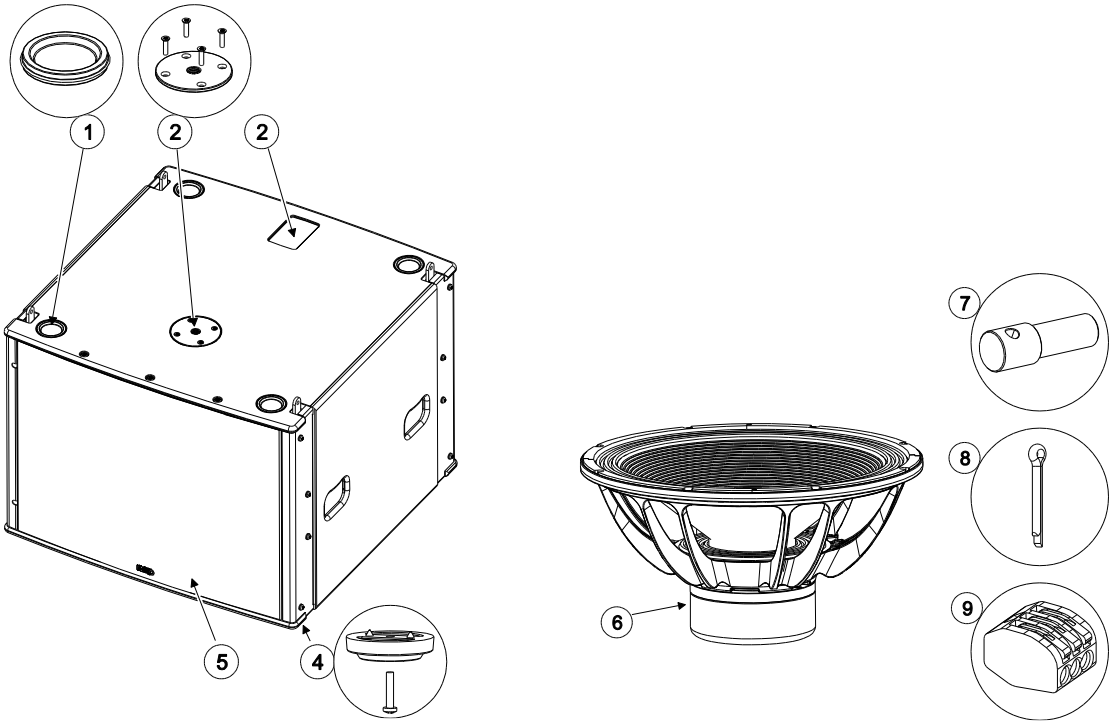

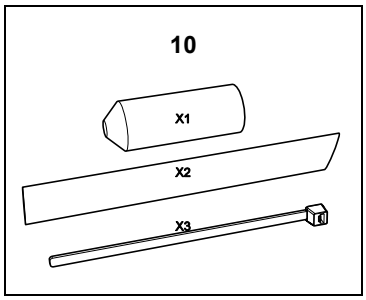

MARK	QUANTITY	REFERENCE	DESIGNATION
1	4	05PC60	Hoosing Feet 60
2	1	05DOUILM20	Connector Plate M20 (with screws)
	1	05DOUILM20W	Connector Plate M20 White (with screws)
3	1	05LEXSUB18I	Lexan MSUB18-I
	1	05LEXSUB18-IPW	Lexan MSUB18-I white
4	4	05PT60	Feet 60 (with screw)
5	1	05MSUB18-UAI	Complete grille Installation Black (with fasteners)
	1	05MSUB18-UAIPW	Complete grille Installation White (with fasteners)
6	1	05HP18SW-4	18'' Driver (with screws)
	1	05HP18SW-4-RK	Recone kit HP18SW-4 (with screws)
7	4	05VAX8-30-18.5	Clevis axis 8x30x18.5 + Split Pin Ø3.2x20 (x4)
8	4	05VGOUF3.2X20	Split Pin Ø3.2x20 (x10)
9	2	05CNX222-413	Wago 3Pt
10	1	05MSUB18KIT	MSUB18-I IP54KIT

NOTE:

Speakers and Grills can be sent back to NEXO for recycling

TECHNICAL SPECIFICATIONS

MSUB18 WITH NEXO ELECTRONICS

Frequency range (±6dB)	32Hz – 120Hz
Sensibility (1W / 1m)	107dB SPL Nominal
Peak SPL Level (1m)	139 dB
Operating voltage	80 Vrms (180 Vpeak)
Crossover Frequency	32-65; 32-75; 32-85; 32-95; 32-120 Hz
Nominal Impedance	4Ω
Recommended Amplification	2000 W per cabinet

SPECIFICATIONS

Model	**MSUB18-I**
Components	1x 18 ‘’ – 4 Ohms – Long excursion – Neodymium driver
Material	Baltic birch plywood
Finish	Black or white structural paint
Front finish	Steel front grille + Back mesh
Fittings	8x Side handles Retractable rigging Semi-auto lock
Connector	2 x cable gland with 2 cores cables
Weight	55 kg – 122 lb
Dimensions	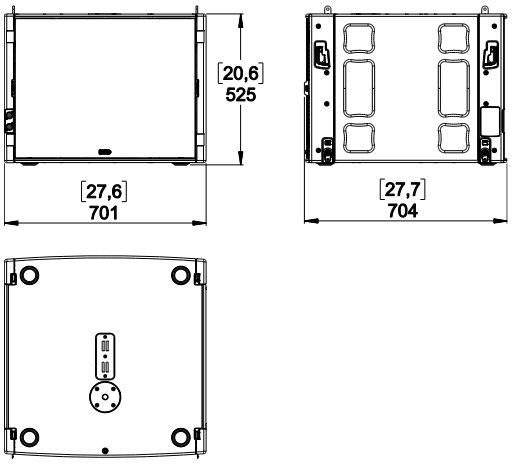

USER NOTES

NEXO S.A.

Parc d'activité de la Dame Jeanne
F-60128 PLAILLY

Tel: +33 3 44 99 00 70
Fax: +33 3 44 99 00 30
E-mail: info@nexo.fr

nexo-sa.com