2026-10-22

DP2818-01f-DI

GEOM1210-I / GEOM1220-I

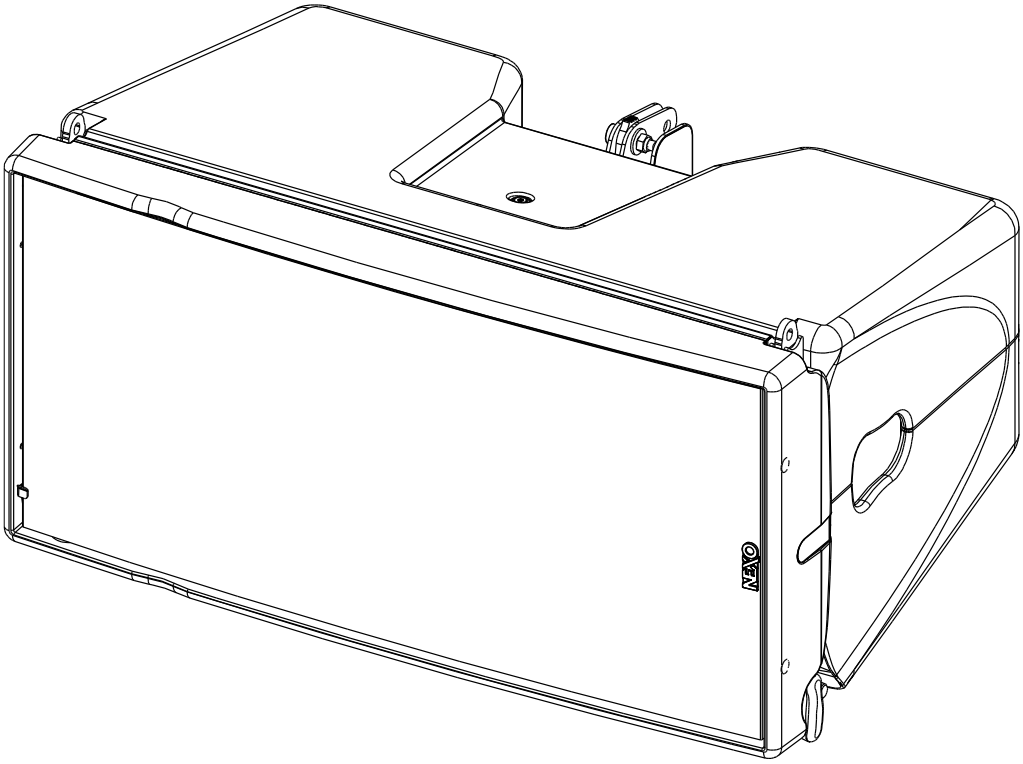

Content

	X1	X3 M8	X2 M8	X1 D10x20	X2 M10
X1 GEOM12xx-I **X1 DP2651**		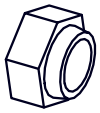		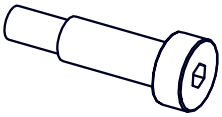	

User manual

IP54

TABLE OF CONTENTS

TABLE OF CONTENTS 2
WARNINGS 3
DESCRIPTION 4
PRESET GEOM12 5
GEOM12 RIGGING 9
GEOM12 – ACCESSORIES 10
ARRAY EQ 13
MAINTENANCE 14
TECHNICAL SPECIFICATIONS 16
USER NOTES 17

WARNINGS

PRECAUTIONS

Do not open the speaker, do not try to disassemble it neither to modify it in any way. The system doesn't include any user-repairable part.

If the system seems to be malfunctioning or damaged, stop using it at once and have it repaired by a NEXO qualified technician.

Do not expose the system directly to the sun or to the rain, do not immerse it into fluids, do not place objects filled with liquid on the system. If a liquid gets into the system, please have it inspected by a NEXO qualified technician.

When flying outdoor systems ensure that the system is not exposed to excessive wind or snow loads and is protected from rainfall.

In case of wind greater than 8 on Beaufort scale (72km/h – 45mph), a touring system has to be landed or an additional securing has to be implanted.

For fixed installations, wind loading has to be taken into account in accordance to the national standards

The connection should be performed by qualified technician, by ensuring that power is off.

Operating temperature with temperate climate: 0°C to +40°C (+32°F to +104); -20°C à +60°C (-4°F to +140°F) for storage.

SAFETY INFORMATIONS

Read this manual before using the speaker.

Keep this manual available for further reference.

Observe all warnings and cautions.

Please check the NEXO Web site **nexo-sa.com** to get the most up-to-date version of this manual.

Ensure you are aware of the safety rules applying to rigging, stacking or installing on tripod or speaker stand. Failure to observe these rules may expose persons to potential wounds or even death.

Only use the system with accessories specified by NEXO.

Please always consult a NEXO-accredited technician if the installation needs architectural works and observe following precautions:

Mounting Precautions:

- Please select screws and mounting location supporting 4 times the system weight.
- Do not expose the system to excessive dust, vibrations, to extreme cold or hot temperatures, to reduce the risk of damaging components.
- Do not place the system in an unstable position: it could fall accidentally.
- If the system is used on a tripod, please ensure the tripod's specifications are adapted and that its height does not exceed 1.40m/55". Do not move the tripod with the system in position.

Connection and Powering Precautions:

- Unplug connected cables before moving the system.
- Power off the system before connecting the system.
- When switching on the installation, the amplifier must be powered last; when switching the installation off, shut off the amplifier first.
- If you work by cold temperatures, progressively raise the level to nominal value during the first minutes of use, to allow the system components to stabilize.

Please check regularly the system condition.

HIGH SOUND PRESSURE LEVELS

Exposure to very high sound pressure levels may cause permanent hearing losses. Degrees of hearing losses may be different from one person to another, but almost everybody will be affected if exposed to high sound pressure levels during a long period of time. The OSHA (Occupational Safety and Health Administration) American Agency specified the following maximal exposures:

Number of Hours	Sound Pressure Level (dBA), Slow Response
8	90
6	92
4	95
3	97
2	100
1 ½	102
1	105
½	110
¼ or less	115

WASTE OF ELECTRIC OR ELECTRONIC EQUIPMENT

This symbol on the product or its packaging indicates that this product must not be treated as household waste. Instead, it is your responsibility to hand it over to a designated collection point for the recycling of waste electrical and electronic equipment. By ensuring your waste equipment is recycled, you will help prevent potential negative consequences for the environment and human health, which could appear if this product was not recycled. Recycling helps spare natural resources. For more information about the recycling of this product, please contact your local city office, your household waste disposal service or your reseller.

DESCRIPTION

→ GEOM1210-I and GEOM1220-I are a mid-size line array, 2 ways active/passive, with a 12'' LF and a 1.4'' HF.

→ You can change the HF horizontal directivity from 80° to 120° by adding a pair of magnetic flanges.

→ The GEOM12 can be stacked of flown with the HF waveguide exit on the left or the right side of the front panel, allowing to broaden or narrow the stereo image depending on your need and the characteristics of the venue. We recommend to build system with the HF waveguide on the outside of each assembly (larger stereo image).

→ GEOM1210-I: 10° vertical dispersion

→ GEOM1220-I: 20° vertical dispersion

→ Versions:

- GEOM1210-I: fix installations; Black
- GEOM1210-IPW: fix installations; White
- GEOM1220-I: fix installations; Black
- GEOM1220--PW: fix installations; White

→ Connectors:

- GEOM1210-I/1220-I: two cable-glands (clamping range, Ø 10 to 17mm), behind the plate are four 3-point quick connectors (In, Out, Filter).
  - Remove the connecting plate.
  - Pass the cables through the cable-gland.
  - Connect to the fast connectors:
    - ACTIVE
      - LF **(+) Red or Brown / (-) Black.**
      - HF **(+) Orange or Yellow/Green / (-) Grey**
    - PASSIVE: **(+) Orange or Yellow/Green / (-) Grey**
  - Tight the cable-gland and remount the connecting plate.

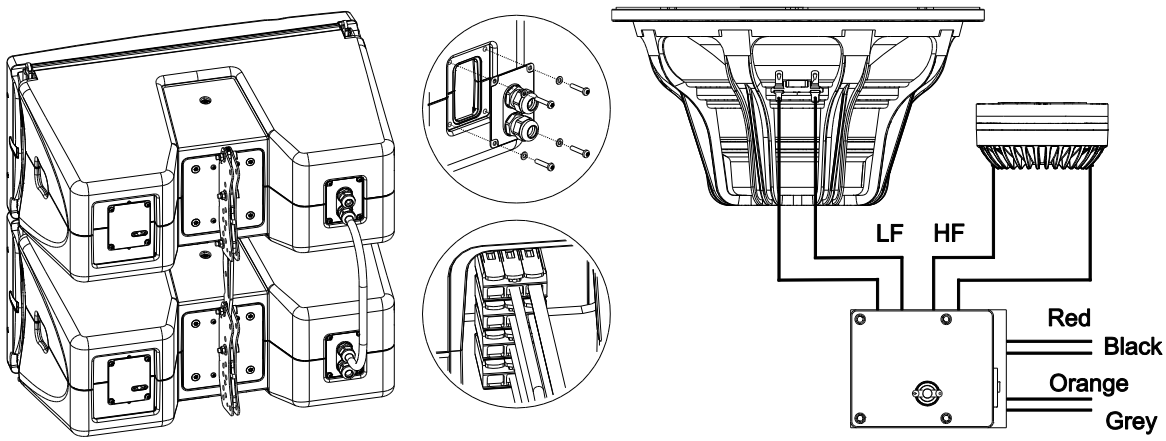

→ Amplification:

- The GEOM12 cabinets MUST be used with a NEXO processor to handle EQ, phase alignment, crossover and excursion/thermal protection for the system loudspeakers.
- The following table shows the number of GEOM12 usable with each solution.

	microNXAMP4x1	NXAMP4x1(bridged)	NXAMP4x2 (bridged)	NXAMP4x4
GEOM12	1 per bridged channel	Up to 2 per channel	Up to 2 per channel	Up to 3 per channel
				Recommended

PRESET GEOM12

Please consult nexo-sa.com for NEXO TD Controllers firmware information.

For the **GEOM1210 or GEOM1220**, with or without directivity flanges, the following setups are available:

Passive Mode

- Setup for one stand-alone box, with high-pass at 50, 60, 75, 85, 95 or 120 Hz.
- Setup for arrays from 2 to 3 boxes, with high-pass at 50, 60, 75, 85, 95 or 120 Hz.
- Setup for arrays from 4 to 6 boxes, with high-pass at 50, 60, 75, 85, 95 or 120 Hz.
- Setup for arrays from 7 to 12 boxes, with high-pass at 50, 60, 75, 85, 95 or 120Hz.
- Setup for Stack Monitor, with high-pass at 50, 60 or 75 Hz.

Active Mode

- Setup HF for arrays from 2 to 3 boxes, 1 kHz– 20 kHz
- Setup HF for arrays from 4 to 6 boxes, 1 kHz– 20 kHz
- Setup HF for arrays from 7 to 12 boxes, 1 kHz– 20 kHz

- Setup LF for arrays from 2 to 3 boxes, 50, 60, 75, 85, 95 or 120 Hz to 1kHz.
- Setup LF for arrays from 4 to 6 boxes, 50, 60, 75, 85, 95 or 120 Hz to 1kHz.
- Setup LF for arrays from 7 to 12 boxes, 50, 60, 75, 85, 95 or 120 Hz to 1kHz.

➢ 1x GEOM12

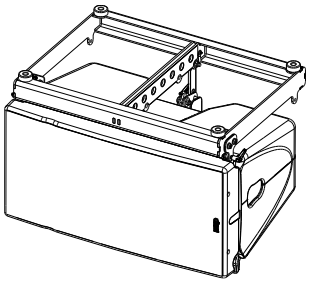

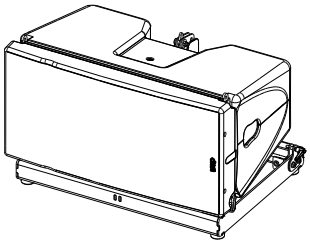

Default Cross over on one box 50 Hz Front Fill, multi-diff, sound reinforcement all short throw application;
High SPL Small system using 2x GEOM12 and 2x MSUB18 in 85 Hz;

➢ 2-3 GEOM12

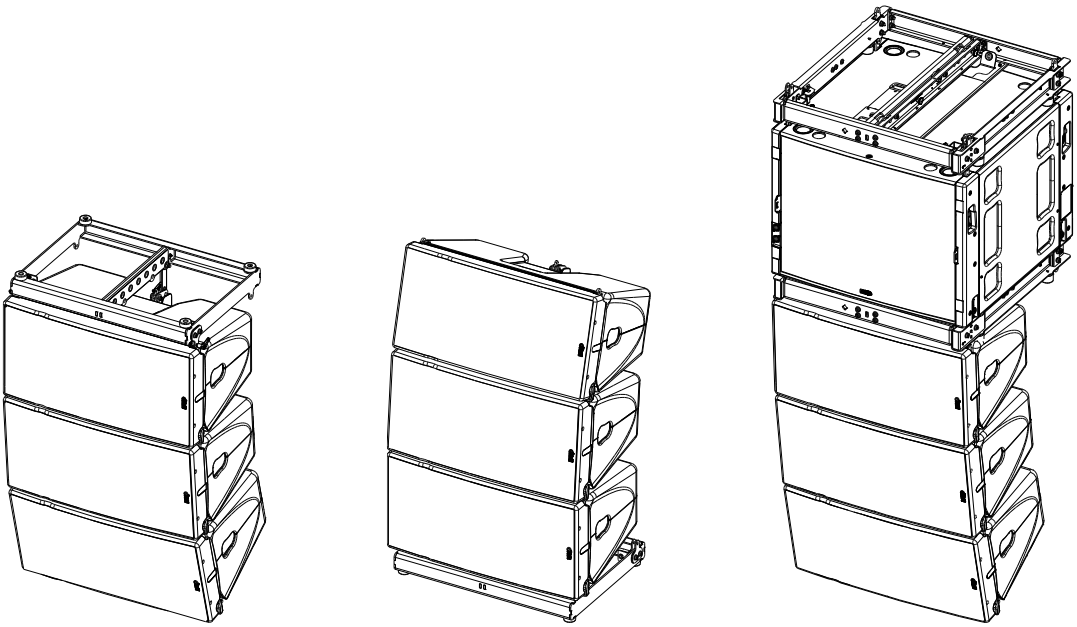

For small flying or stacking configuration, mid throw application used at 60 Hz without MSUB18 and default 85 Hz with MSUB18 at 85 Hz too.

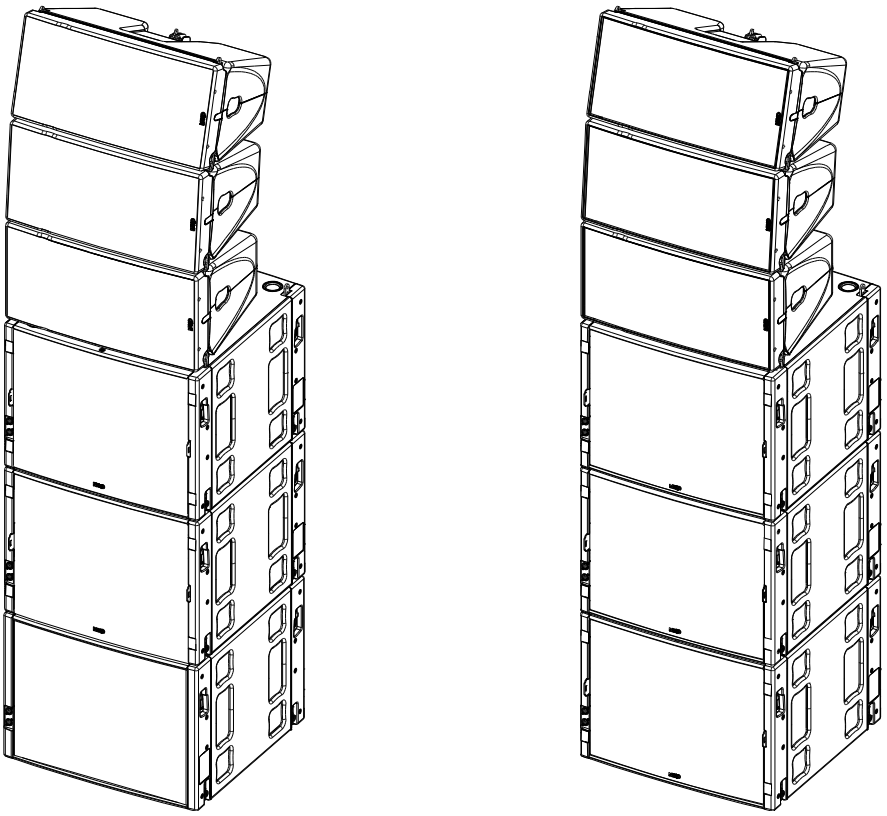

Possibilities to use 2-3Box setup in stack configuration using MSUB18 in OMNI or CARDIO mode with 1 Back and 2 Front and 3 GEOM12 on top of them, application venue up to 25 meters, default cross over 85 Hz but small overlap could have impact if needed, for example (MSUB18 120Hz and GEOM12 75 Hz).

➢ 4-6 GEOM12

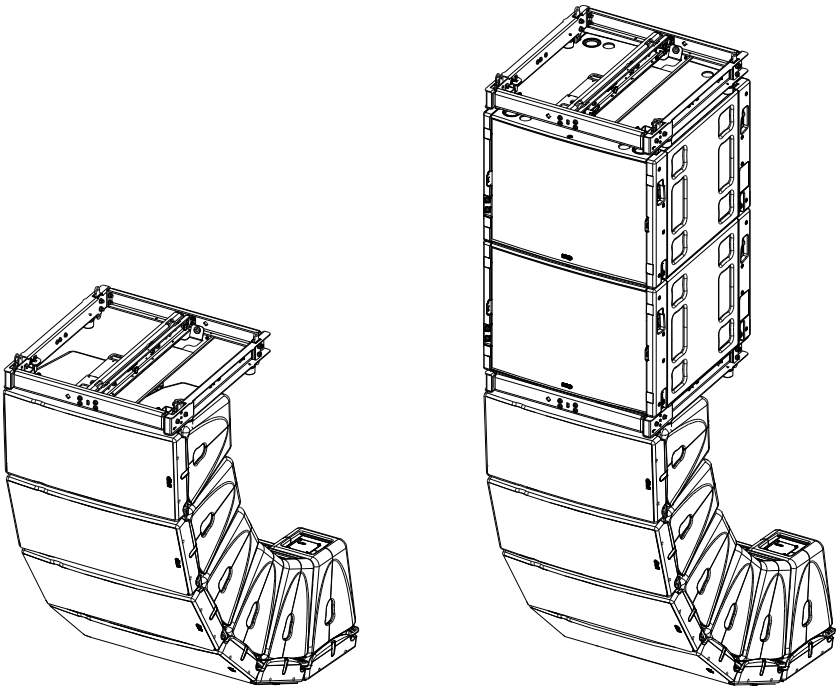

For long throw flying application used in GEOM12 at 60 Hz without sub and GEOM12 at 85 Hz with flying MSUB18 in Omni mode at 95 Hz.

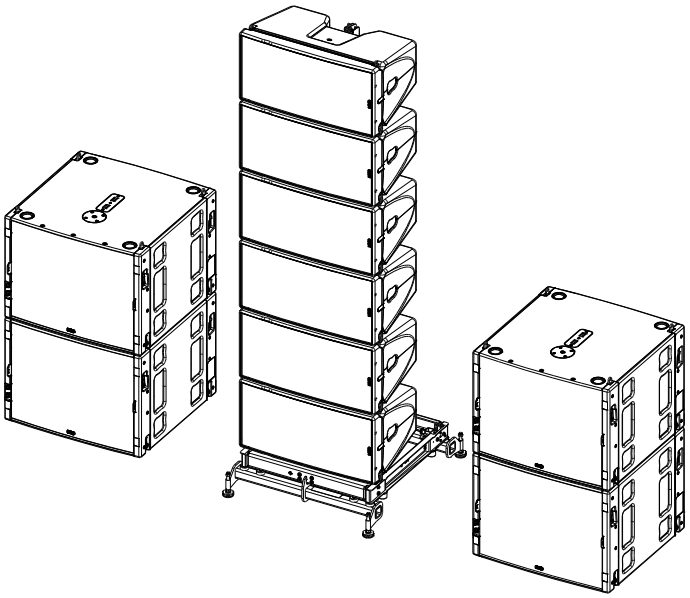

For long throw stacking application on floor or on MSUB18, up to 6 boxes used at 60 Hz without Sub and 85 Hz with MSUB18 at 85 Hz.

➢ 7-12 GEOM12

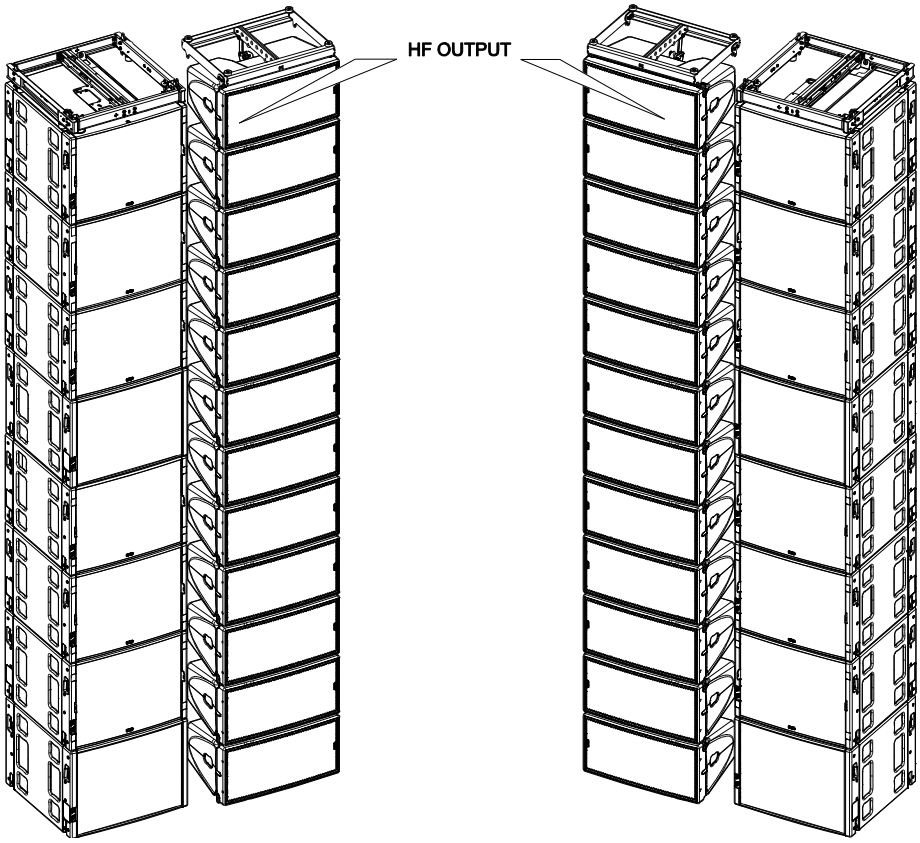

For very long throw flying application used with Sub either ground stack or flying, recommended MSUB18 cardioid mode, cross over MSUB18 95 Hz and 12 GEOM12 cross over 75 Hz for maximum impact. Don't forget to put HF Waveguide either to the exterior or the interior of the venue.

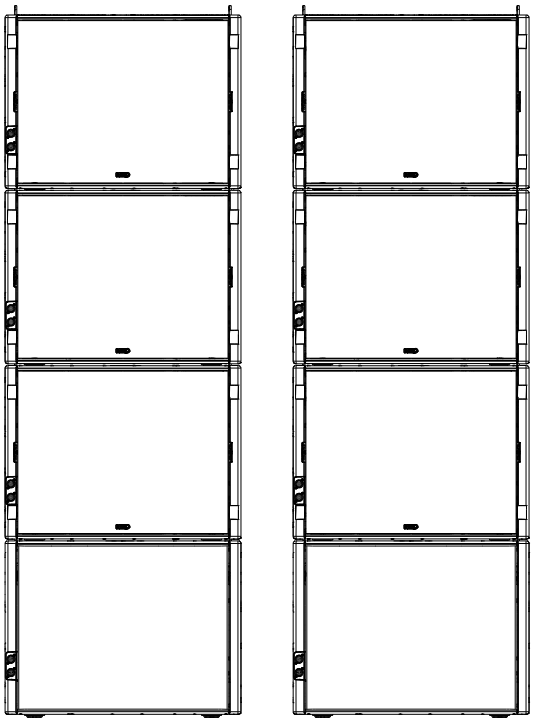

Ground Stack Sub design

GEOM12 RIGGING

Assembly

Front

Positioning 2x GEOM12-I.

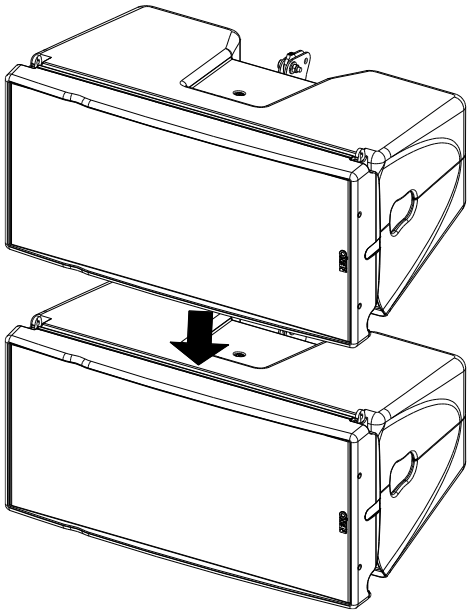

Connect both cabinets by inserting the axis through front holes and secure axis with brake nuts.

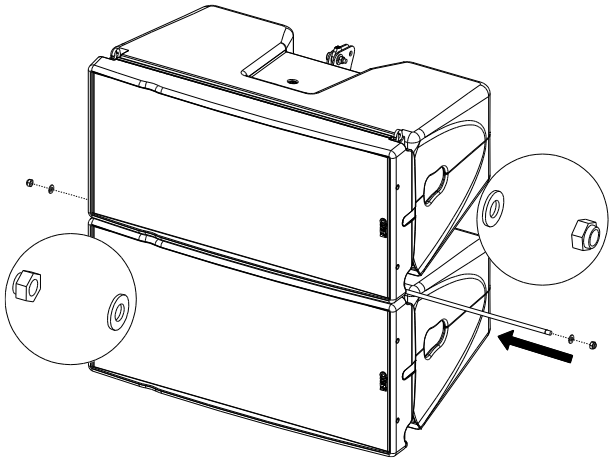

Back

Adjust the appropriate inter-angle value with the Linkbar and secure with the provided screws.

Screws: 1 shoulder screw (D10x20), 2 washers (M10), 1 brake nut (M8).

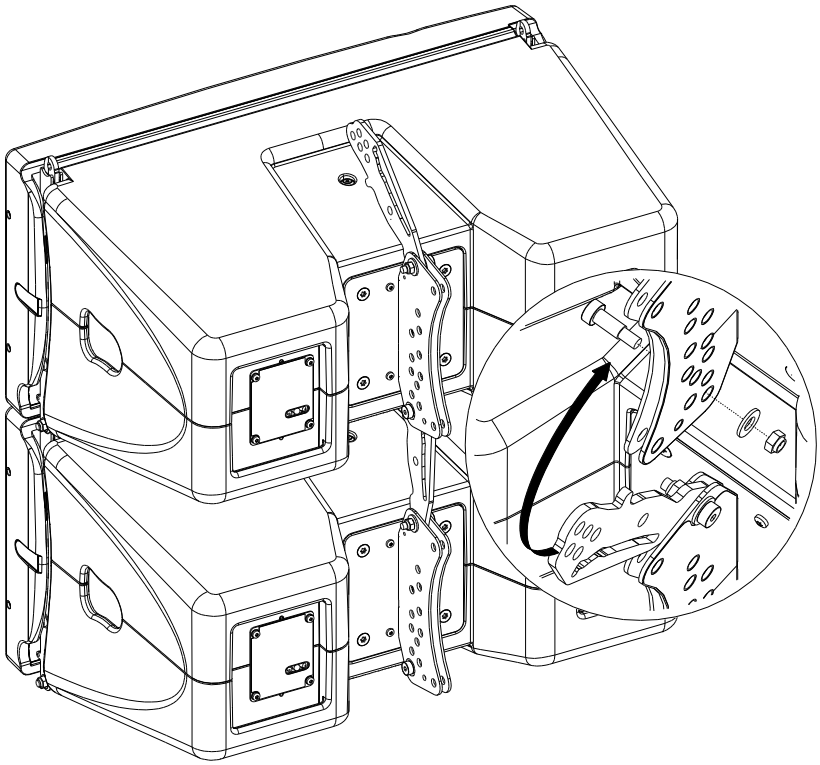

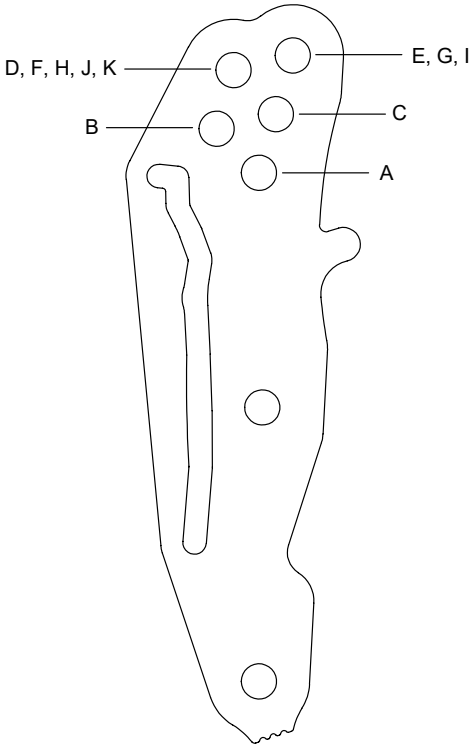

GEOM12 – ACCESSORIES

WARNINGS

All GEOM12 accessories are specifically rated in agreement with structural computations.

Never use other accessories – including push-pins – when assembling GEOM12 cabinets than the ones provided by NEXO: NEXO will decline responsibility over the entire GEOM12 accessory range if any component is purchased from different supplier.

All GEOM12 accessories have been designed so that cabinet are arrayed vertically.

GEOM12 horizontal assemblies as shown in figure below are UNSAFE and STRICTLY PROHIBITED

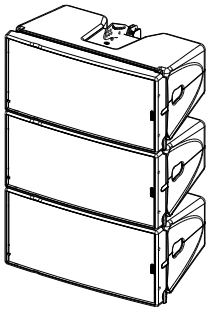

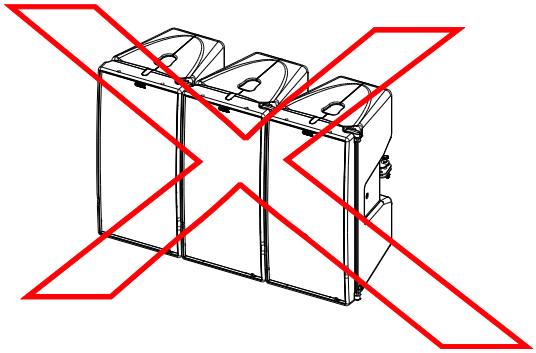

VNI/VNT-BUMPM12

Rated for a maximum of 12 GEOM12 or 8 MSUB18, or a combination with a maximum of 4 MSUB18 and 6 GEOM12.

Flown on 2 rigging points with retractable rings.

Usable with VNT-EXBARM12 for extra tilt angle and flown on one or two rigging points.

Ground stack assembly alone, or with VNT-GSTKM10M12S / VNT-GSTKM10M12L for adding stability.

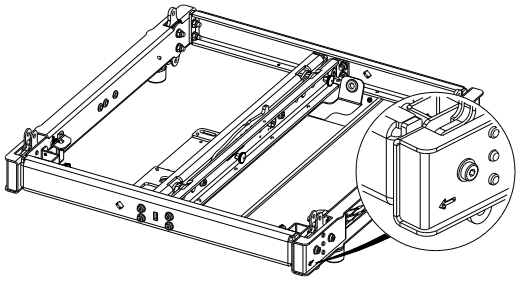

Refer to the Product Data Sheet

VNT-EXBARM12

Extension bar for VNI/VNT-BUMPM12

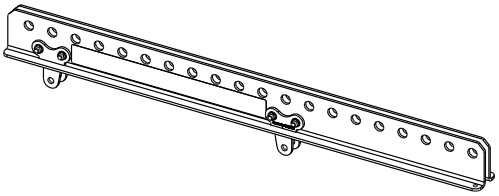

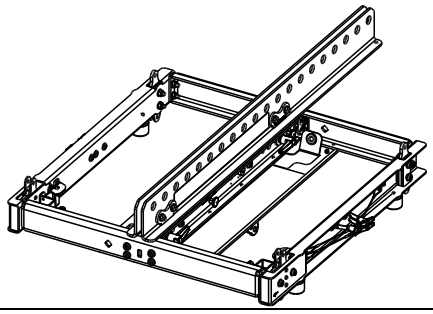

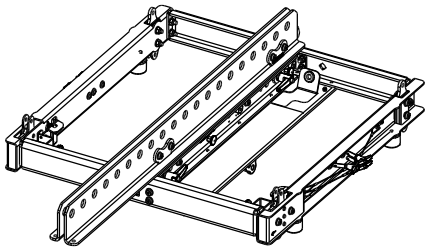

Refer to the Product Data Sheet

VNT-GSTKM10M12S

VNT-GSTKM10M12L

Stacking accessories for GEOM10/GEOM12 with VNI/VNT-BUMPM12

Refer to the Product Data Sheet

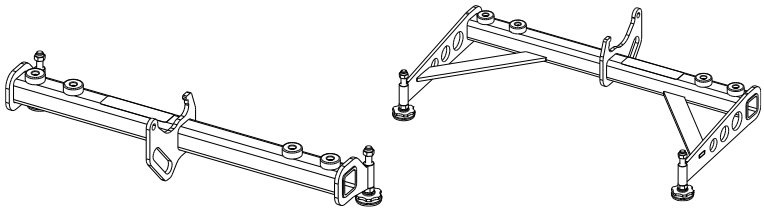

VNT-MNSTKM12

Max 3 GEOM12.

Stacking accessorie for GEOM12 on MSUB18.

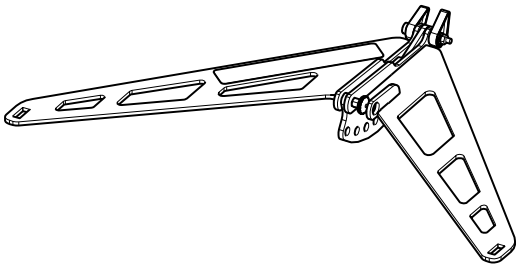

Refer to the Product Data Sheet

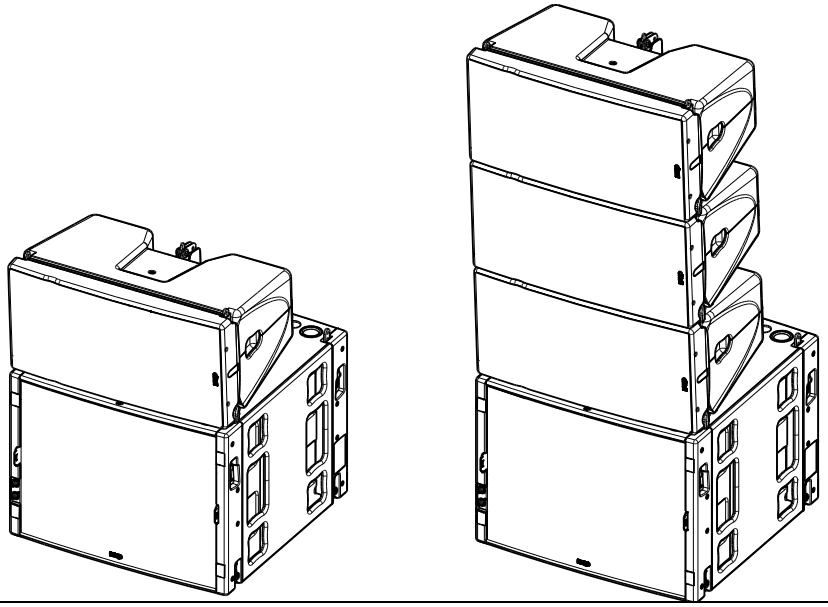

GMT-LBUMP12

Max 12 GEOM12.

Usable with GMT-EXBARM12L for 1 rigging point.

Refer to the Product Data Sheet

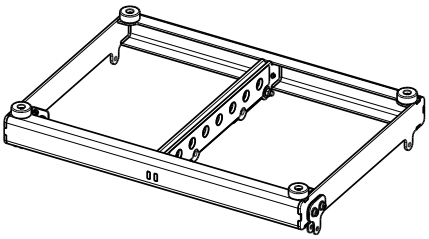

GMT-EXBARM12L

Max 12 GEOM12.

Usable with GMT-LBUMPM12.

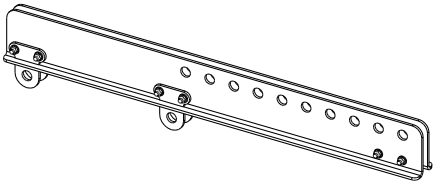

Refer to the Product Data Sheet

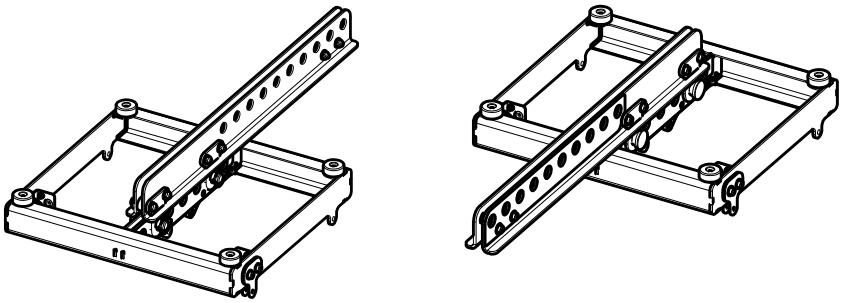

VNT-TCBRK3551

Rotary Truss Clamp

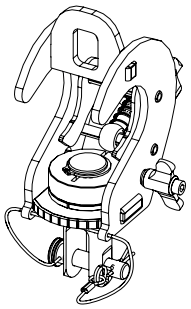

Placer VNT-TCBRK3551 on GMT-LBUMPM12, GMT-LBUMPM12 or VNT-EXBARM12 at the desired hole.

Refer to the Product Data Sheet

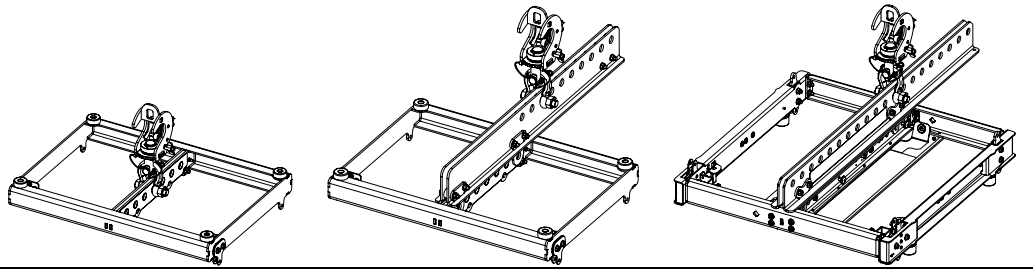

GMT-FLGM12

Pair of flanges for 120°horizontal directivity.

No tools, magnetic clamp.

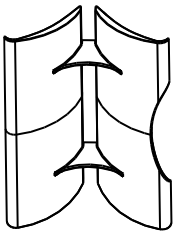

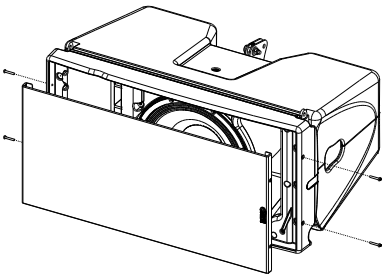

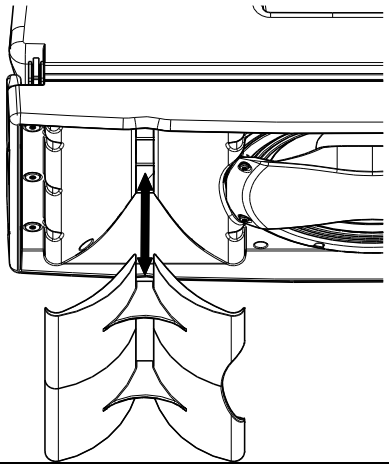

Refer to the Product Data Sheet

ARRAY EQ

The ArrayEQ allows to adjust the system frequency response in its lower range (see curves below, with different ArrayEq values):

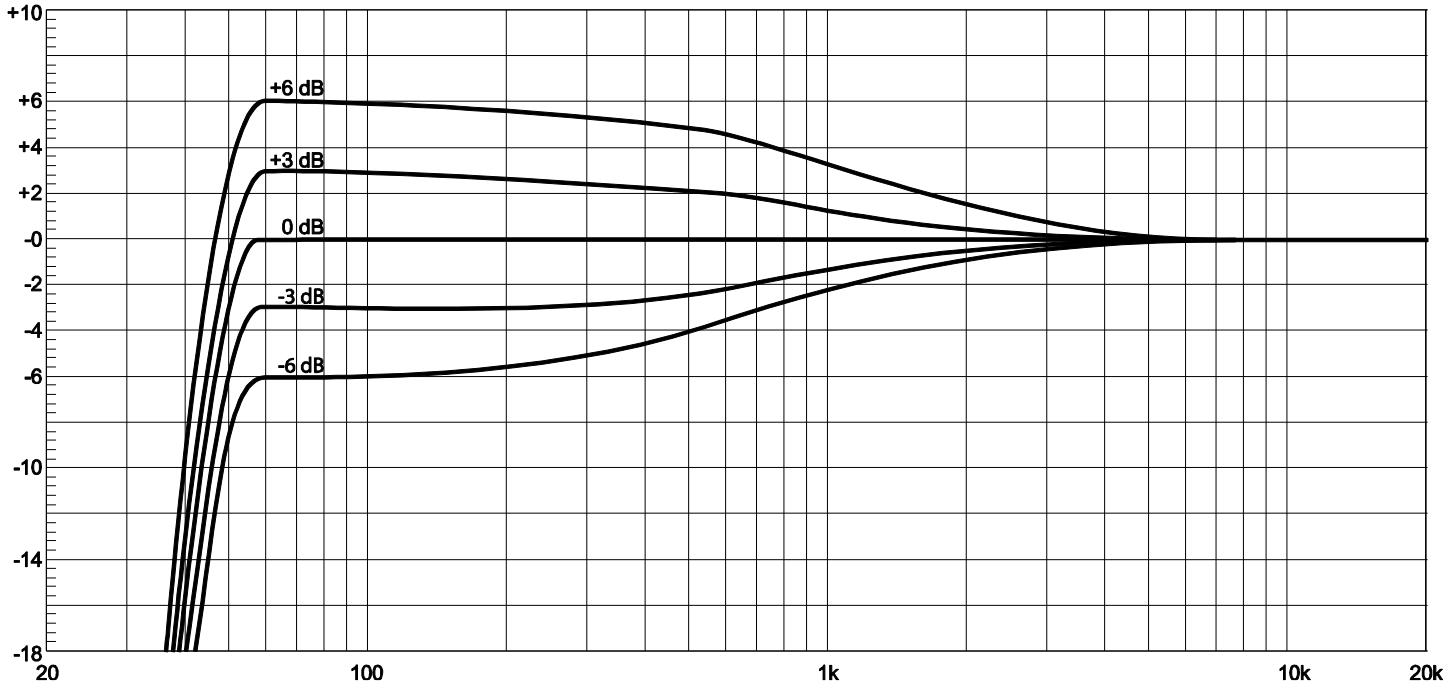

MAINTENANCE

Front panel disassembly

Pull the lever to remove the grille on the side (attached with a sling).	Remove the front panel (10 screws Tx25) Tightening torque: 3.5 Nm
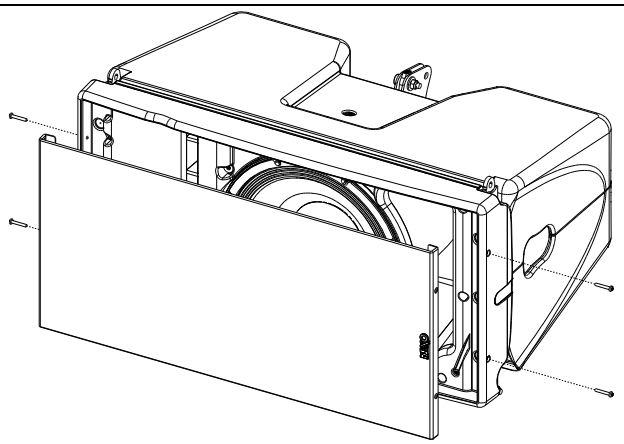	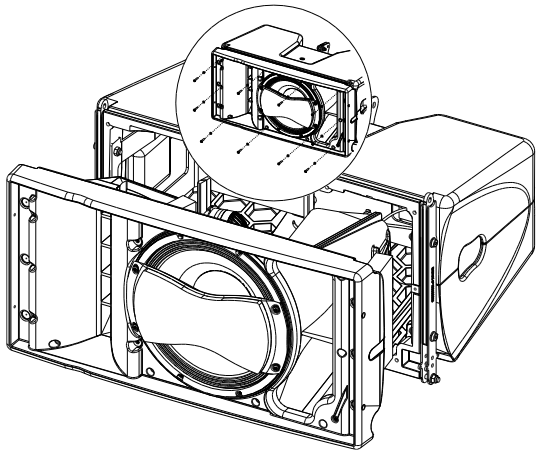
To remove the HF Driver, unscrew the 4 nuts, and remove it from the wave guide.	To remove the 12'' driver, remove the 8 screws (Tx25). Pay attention to the 4 spacers below the PMP. Tightening torque for the 12'': 3,5 Nm
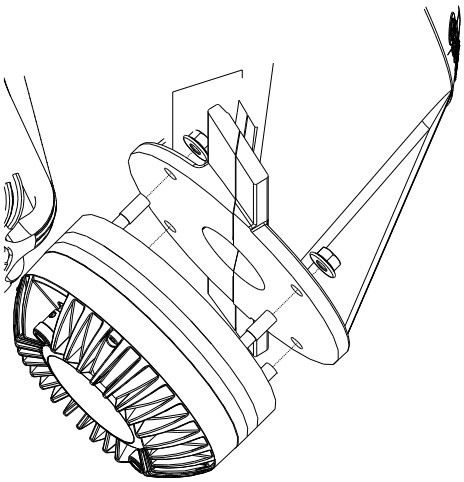	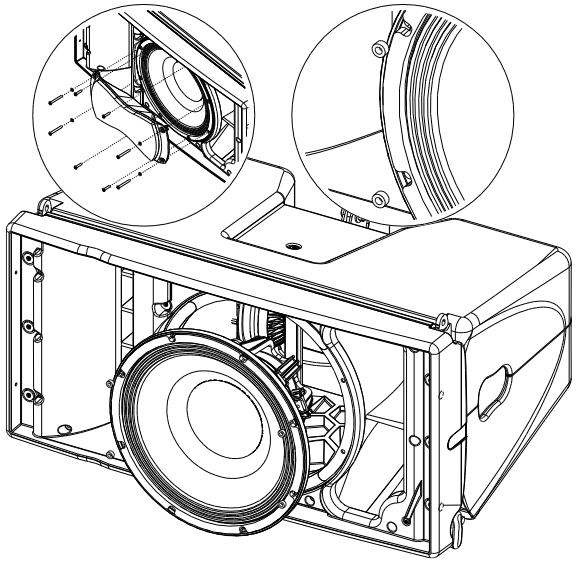

Spare parts

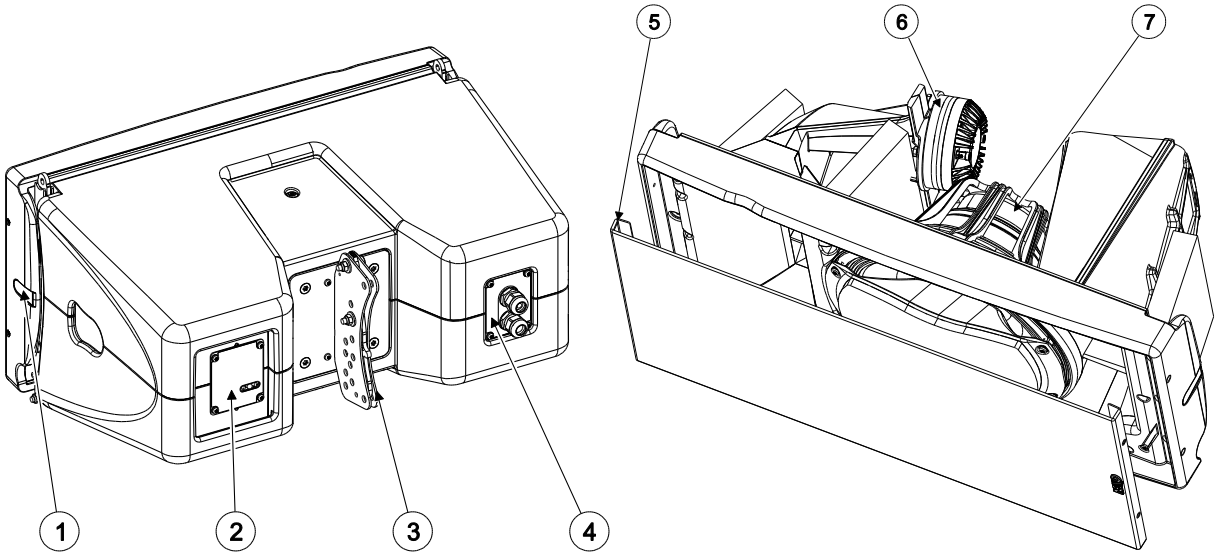

MARK	QUANTITY	REFERENCE	DESIGNATION
1	2	05LEXM1210	Lexan GEOM1210 black
	2	05LEXM1210-PW	Lexan GEOM1210 white
	2	05LEXM1220	Lexan GEOM1220 black
	2	05LEXM1220-PW	Lexan GEOM1220 white
2	1	05LEXWAR1	Lexan Warning
	1	05LEXWAR1-PW	Lexan Warning White
3	1	05LEXRIG-ANGL1	Lexan Rigging Angles
	1	05LEXRIG-ANGL1-PW	Lexan Rigging Angles White
4	1	05LEXCNX-M1210-I	Lexan CNX GEOM1210-I
	1	05LEXCNX-M1210-IPW	Lexan CNX GEOM1210-I White
	1	05LEXCNX-M1220-I	Lexan CNX GEOM1220-I
	1	05LEXCNX-M1220-IPW	Lexan CNX GEOM1220-I White
5	1	05GEOM12UA-I	Complete grille Installation Black
	1	05GEOM12UA-IPW	Complete grille Installation White
6	1	05NH78TN-16	HF Driver complete (with screws)
	1	05NH78TN-16-RK	HF Diaphragm
7	1	05HPB12PN-8	12'' Driver
	1	05HPB12PN-8-RK	Recone kit HPB12PN-8

NOTE:

Speakers and Grills can be sent back to NEXO for recycling

TECHNICAL SPECIFICATIONS

GEOM12 WITH NEXO ELECTRONICS

Model	GEOM12
Frequency range (±6dB)	50Hz – 20kHz
Sensibility (1W / 1m)	105dB SPL Nominal
Peak SPL Level (1m)	140dB
Operating voltage	50 Vrms (180 Vpeak)
Vertical Dispersion	10° for GEOM1210 20° for GEOM1220
Horizontal Dispersion	80° or 120° (with magnetic flanges GMT-FLGM12)
Crossover Frequency	LF-HF: 1.1kHz Passive
Nominal Impedance	Active mode: (8Ω LF - 16Ω HF) – Passive mode: 8 Ω
Recommended Amplification	Active mode: (1250W LF + 650W HF) – Passive mode: 1250 W per cabinet

SPECIFICATIONS

Model	GEOM12-I
Components	LF: 1x 12'' - 8Ω - Long excursion – Neodymium driver with PDD™ HF: 1x3" voice coil 1.4'' throat driver on a BEA/FEA optimized HRW™
Material	Lightweight polyurethane composite
Finish	Black or white structural paint
Front finish	Black or white acoustic fabric fitted front steel grille
Fittings	2 Side handles horizontal Back grip
Connector	2 x cable gland with 4 cores cables
Weight	34 kg – 75 lb
Dimensions	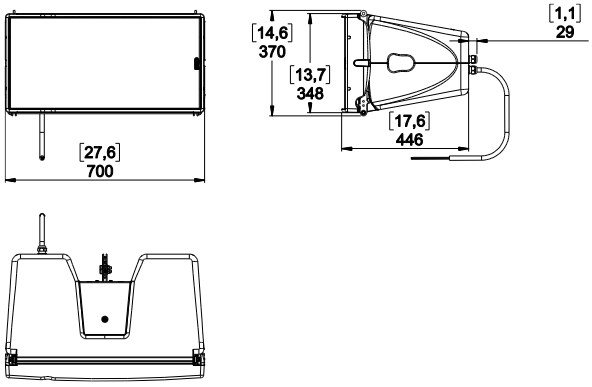

USER NOTES

NEXO S.A.

Parc d'activité de la Dame Jeanne
F-60128 PLAILLY

Tel: +33 3 44 99 00 70
Fax: +33 3 44 99 00 30
E-mail: info@nexo.fr

nexo-sa.com