2026-10-22

DP2752-03f-DI

GEOM1012-I / GEOM1025-I

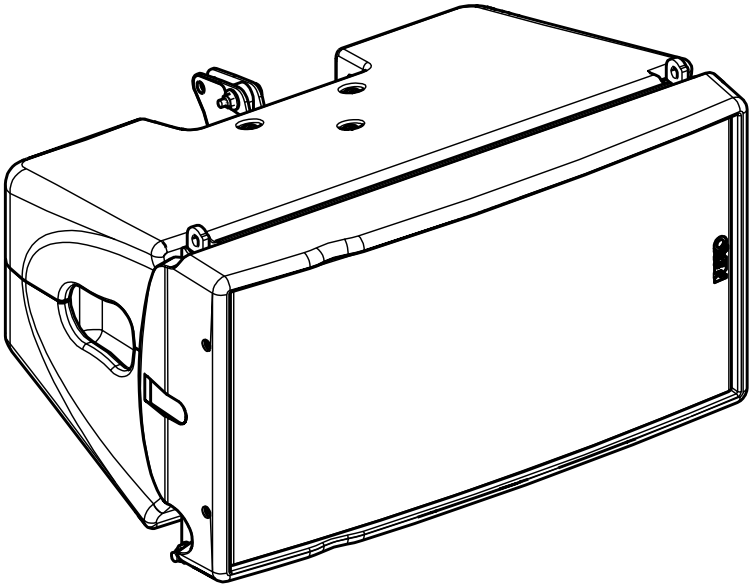

Content

	X1	X2 M8	X4 M8	X1 D8x20	X1 M6
X1 GEOM10xx-I **X1 DP2651**				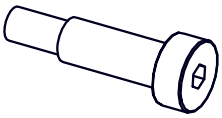	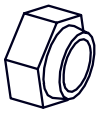

User manual

IP54

TABLE OF CONTENTS

TABLE OF CONTENTS 2
WARNINGS 3
DESCRIPTION 4
PRESET GEOM10 5
GEOM10 RIGGING 10
GEOM10 – ACCESSORIES 11
ARRAY EQ 14
MAINTENANCE 15
TECHNICAL SPECIFICATIONS 17
USER NOTES 18

WARNINGS

PRECAUTIONS

Do not open the speaker, do not try to disassemble it neither to modify it in any way. The system doesn't include any user-repairable part.

If the system seems to be malfunctioning or damaged, stop using it at once and have it repaired by a NEXO qualified technician.

Do not expose the system directly to the sun or to the rain, do not immerse it into fluids, do not place objects filled with liquid on the system. If a liquid gets into the system, please have it inspected by a NEXO qualified technician.

When flying outdoor systems ensure that the system is not exposed to excessive wind or snow loads and is protected from rainfall.

In case of wind greater than 8 on Beaufort scale (72km/h – 45mph), a touring system has to be landed or an additional securing has to be implanted.

For fixed installations, wind loading has to be taken into account in accordance to the national standards

The connection should be performed by qualified technician, by ensuring that power is off.

Operating temperature with temperate climate: 0°C to +40°C (+32°F to +104); -20°C à +60°C (-4°F to +140°F) for storage.

SAFETY INFORMATIONS

Read this manual before using the speaker.

Keep this manual available for further reference.

Observe all warnings and cautions.

Please check the NEXO Web site **nexo-sa.com** to get the most up-to-date version of this manual.

Ensure you are aware of the safety rules applying to rigging, stacking or installing on tripod or speaker stand. Failure to observe these rules may expose persons to potential wounds or even death.

Only use the system with accessories specified by NEXO.

Please always consult a NEXO-accredited technician if the installation needs architectural works and observe following precautions:

Mounting Precautions:

- Please select screws and mounting location supporting 4 times the system weight.
- Do not expose the system to excessive dust, vibrations, to extreme cold or hot temperatures, to reduce the risk of damaging components.
- Do not place the system in an unstable position: it could fall accidentally.
- If the system is used on a tripod, please ensure the tripod's specifications are adapted and that its height does not exceed 1.40m/55". Do not move the tripod with the system in position.

Connection and Powering Precautions:

- Unplug connected cables before moving the system.
- Power off the system before connecting the system.
- When switching on the installation, the amplifier must be powered last; when switching the installation off, shut off the amplifier first.
- If you work by cold temperatures, progressively raise the level to nominal value during the first minutes of use, to allow the system components to stabilize.

Please check regularly the system condition.

HIGH SOUND PRESSURE LEVELS

Exposure to very high sound pressure levels may cause permanent hearing losses. Degrees of hearing losses may be different from one person to another, but almost everybody will be affected if exposed to high sound pressure levels during a long period of time. The OSHA (Occupational Safety and Health Administration) American Agency specified the following maximal exposures:

Number of Hours	Sound Pressure Level (dBA), Slow Response
8	90
6	92
4	95
3	97
2	100
1 ½	102
1	105
½	110
¼ or less	115

WASTE OF ELECTRIC OR ELECTRONIC EQUIPMENT

This symbol on the product or its packaging indicates that this product must not be treated as household waste. Instead, it is your responsibility to hand it over to a designated collection point for the recycling of waste electrical and electronic equipment. By ensuring your waste equipment is recycled, you will help prevent potential negative consequences for the environment and human health, which could appear if this product was not recycled. Recycling helps spare natural resources. For more information about the recycling of this product, please contact your local city office, your household waste disposal service or your reseller.

DESCRIPTION

→ GEOM1012-I and GEOM1025-I are a compact high-technology line array, 2 ways passive, with a 10'' LF and a 1.4'' HF. You can change the HF horizontal directivity by adding a pair of magnetic flanges.

→ GEOM1012-I : 12° vertical dispersion

→ GEOM1025-I : 25° vertical dispersion

→ Versions :

- GEOM1012-I: fix installations; Black
- GEOM1012-I-PW: fix installations; White
- GEOM1025-I: fix installations; Black
- GEOM1025-I-PW: fix installations; White
- For Touring applications, see manual GEOM1012 / GEOM1025

→ Connectors:

- GEOM1012-I/1025-I: two cable-glands, two fast connectors behind the plate.
  - Remove the connecting plate.
  - Pass the cables through the cable-gland.
    - Maximum cable outside diameter 12mm
    - Maximum gauge wire:
      - Solid cable: 2.5 mm^2 / AWG13
      - Multi-stand cord: 4 mm^2 / AWG11
  - Prepare cable as below:

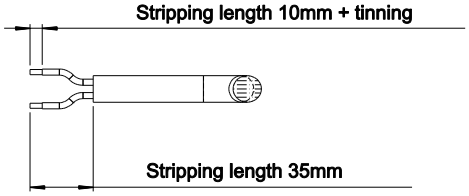

  - Connect to the fast connectors **(+): Brown (or Red) / (-): Blue (or Black).**
  - Remount the connecting plate.
  - Tight the cable-gland and adjust the length.
  - Seal the cabinet with the provided blind plug on the unused cable gland.

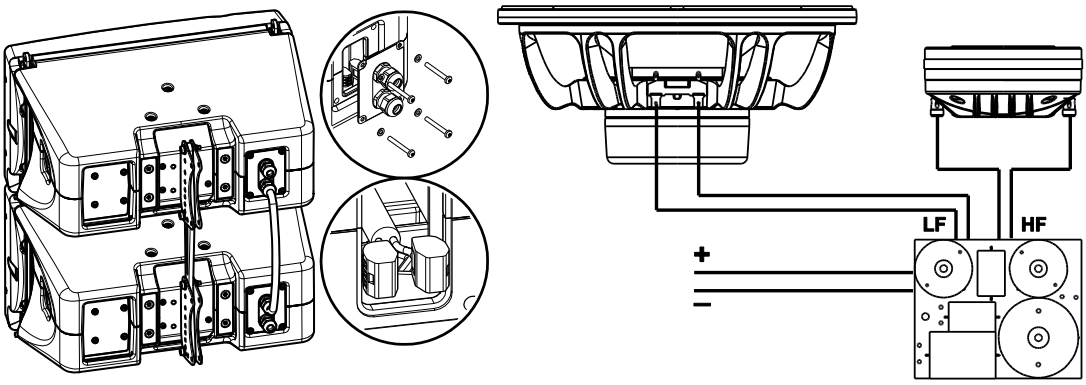

→ Amplification:

- The GEOM10 cabinets MUST be used with a NEXO processor to handle EQ, phase alignment, crossover and excursion/thermal protection for the system loudspeakers. There are two NEXO processor series supporting the GEOM10 cabinet: NXAMP (4-channel) amplified processors and DTD processors (stereo + sub).
- The following table shows the number of GEOM10 usable with each solution.

	DTD + DTDAMP4x1.3
GEOM10	Up to 2 per channel

	microNXAMP4x1	NXAMP4x1MK2	NXAMP4x1MK2 (bridged)	NXAMP4x2MK2	NXAMP4x4MK2
GEOM10	1 per channel	1 per channel	Up to 2 per channel	Up to 3 per channel	Up to 4 per channel
				Recommended	

PRESET GEOM10

Please consult nexo-sa.com for NEXO TD Controllers firmware information.

For the **GEOM1012 or GEOM1025**, with or without directivity flanges, the following setups are available:

- Setup for one stand-alone box, with high-pass at 63, 75, 85, 95 or 120 Hz.
- Setup for arrays from 2 to 3 boxes, with high-pass at 63, 75, 85, 95 or 120 Hz.
- Setup for arrays from 4 to 6 boxes, with high-pass at 63, 75, 85, 95 or 120 Hz.
- Setup for arrays from 7 to 12 boxes, with high-pass at 63, 75, 85, 95 or 120Hz.
- Setup for Stack Monitor, with high-pass at 63, 75 or 85 Hz.

1x GEOM10

- Default Cross over on one box 63 Hz Front Fill, multi-diff, sound reinforcement all short throw application;
- High SPL Small system using 2x GEOM10 and 2x MSUB15 in 85 Hz;

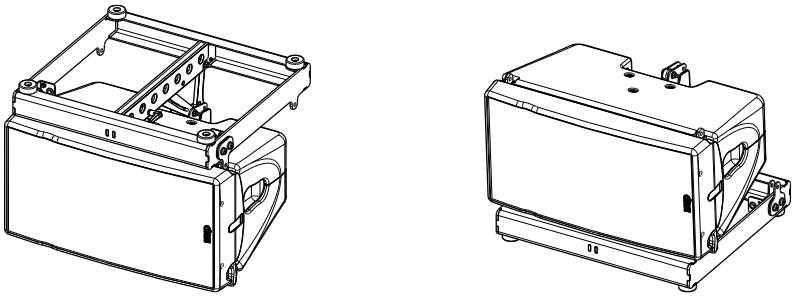

2-3 GEOM10

- For small flying configuration, mid throw application used at 63 Hz without MSUB15 and default 85 Hz with MSUB15 at 85 Hz too.

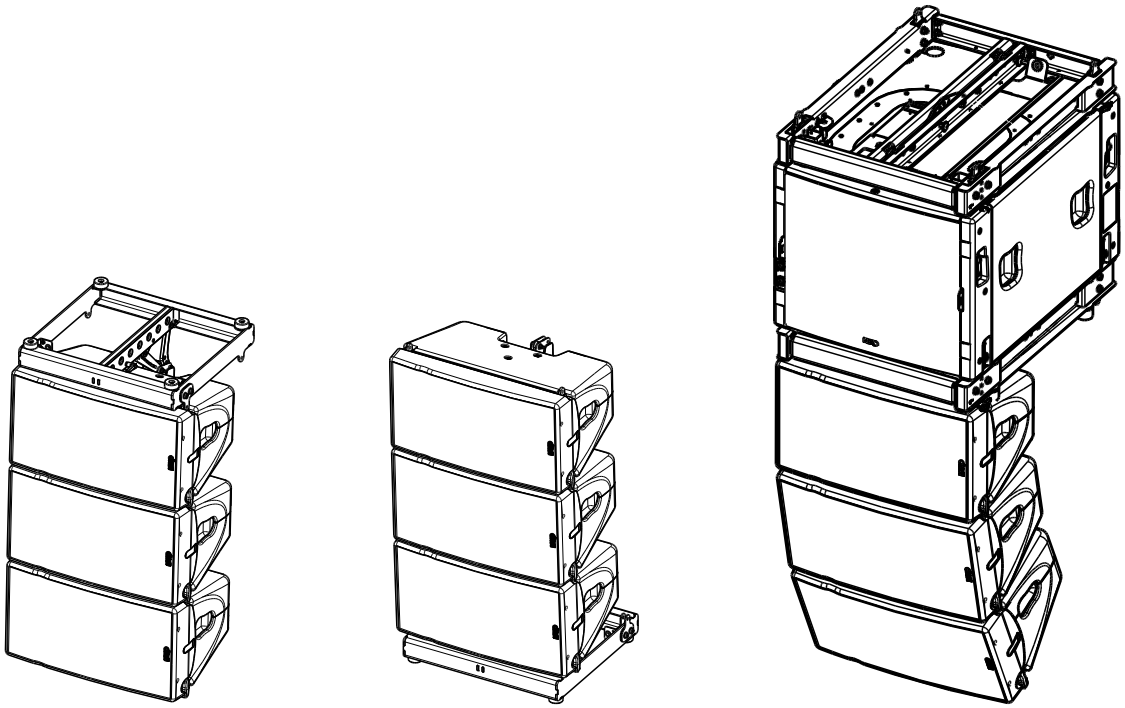

- Possibilities to use 2-3Box setup in stack configuration using MSUB15 in OMNI or CARDIO mode with 1 Back and 2 front and 3 GEOM10 on top of them, application venue up to 15 meters, default cross over 85 Hz but small overlap could have impact if needed, for example (MSUB15 120 Hz and GEOM10 75 Hz).

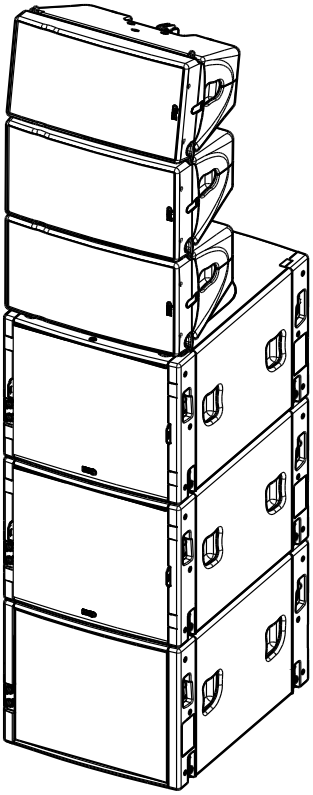

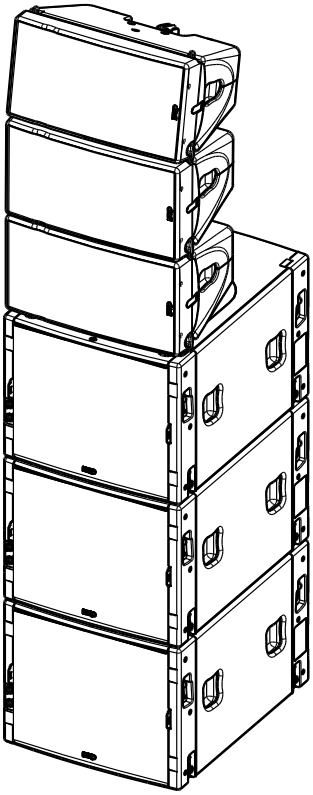

➢ 4-6 GEOM10

- For long throw flying application used in GEOM10 at 63 Hz without Sub and GEOM10 at 85 Hz with flying MSUB15 in cardio mode at 95 Hz.

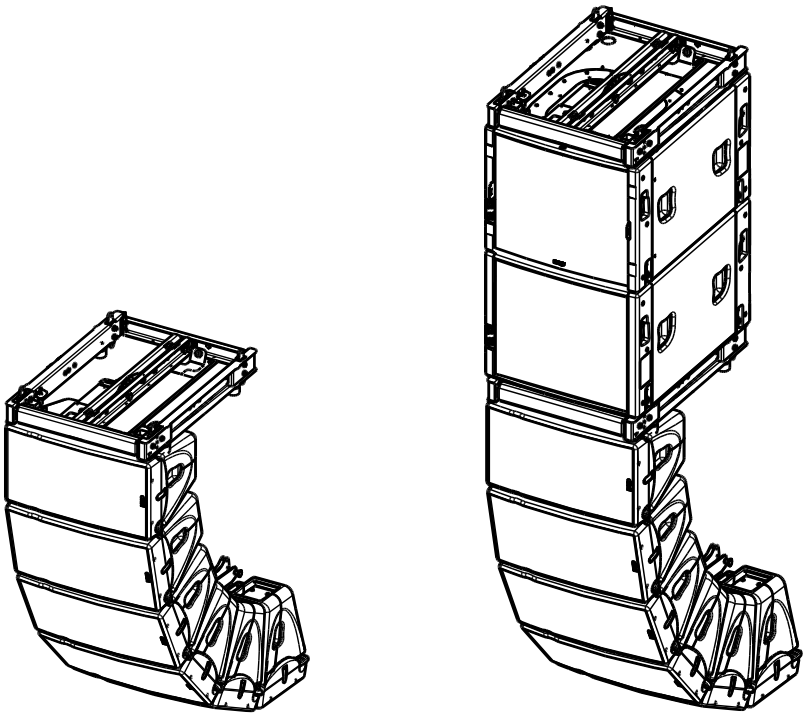

- For long throw stacking application on floor or on MSUB15, up to 6 boxes used at 63 Hz without Sub and 85 Hz with MSUB15 at 85 Hz.

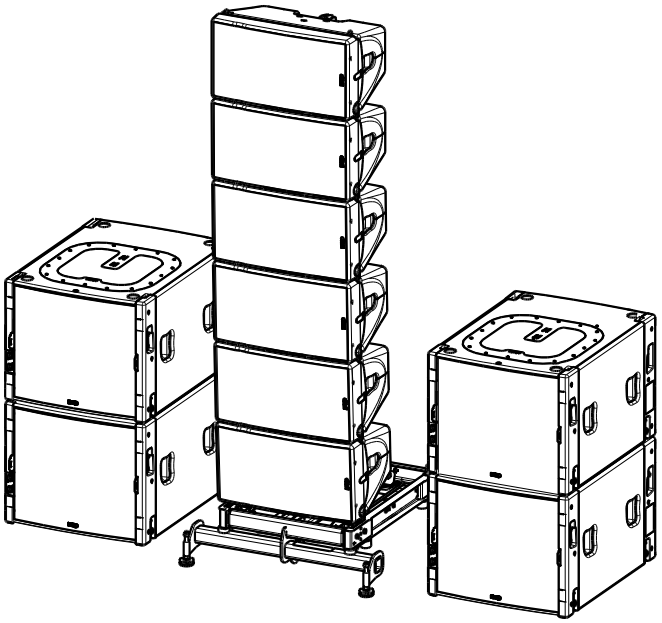

➢ 7-12 GEOM10

- For very long throw application used with Sub either ground stack or flying, recommended MSUB15 cardioid mode, cross over MSUB15 95 Hz and 12 GEOM10 cross over 75 Hz for maximum impact. Don’t forget to put HF Waveguide either to the exterior or the interior of the venue.

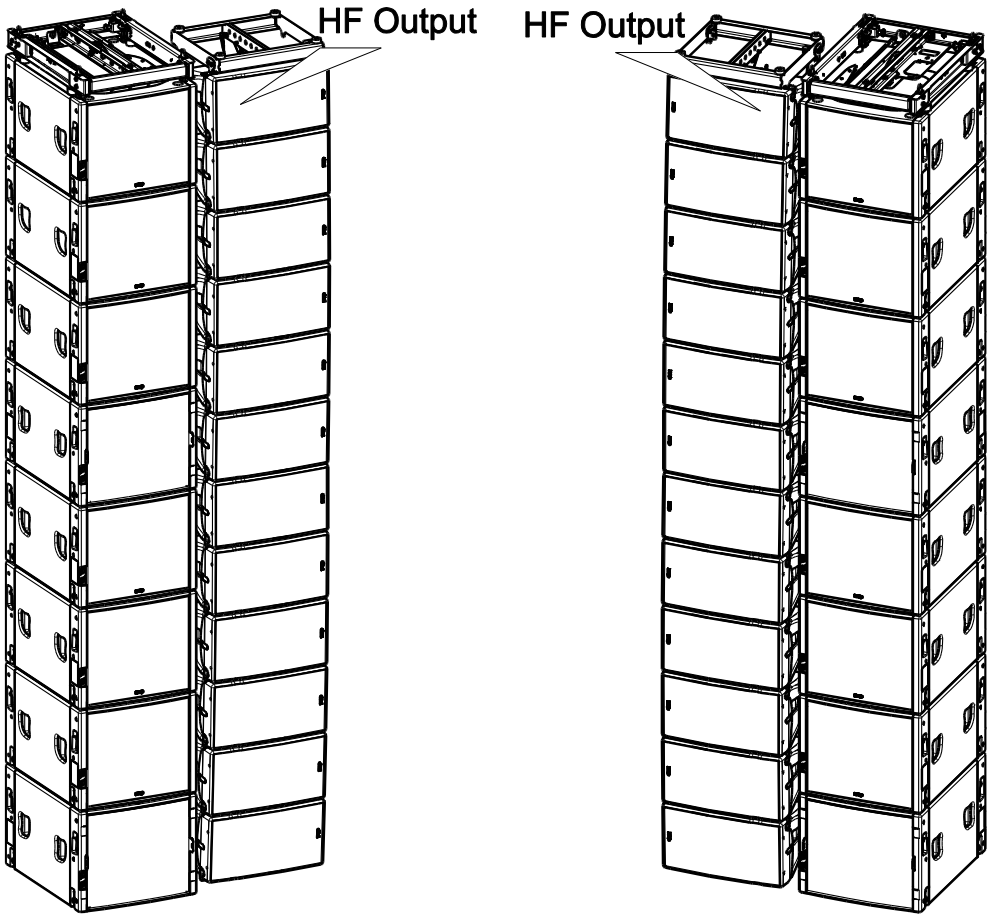

- Ground Stack Sub design is:

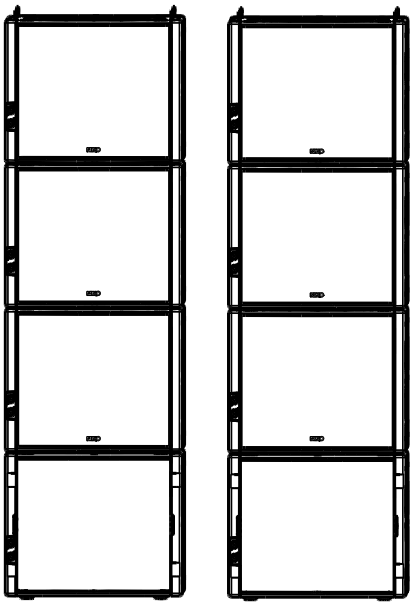

➢ GEOM10 MON and MSUB15 MON

- Minimum phase setup not compatible with others.
- Used for high power stage Monitor, DJ Monitor, Drum Fill, Stack side.
- Always use same cross over between GEOM10 and MSUB15, no overlap possible without doing phase adjustment by yourself.
- Very high LF headroom.
- Clarity adjustment using -3dB on ArrayEQ – 75 Hz crossover default.

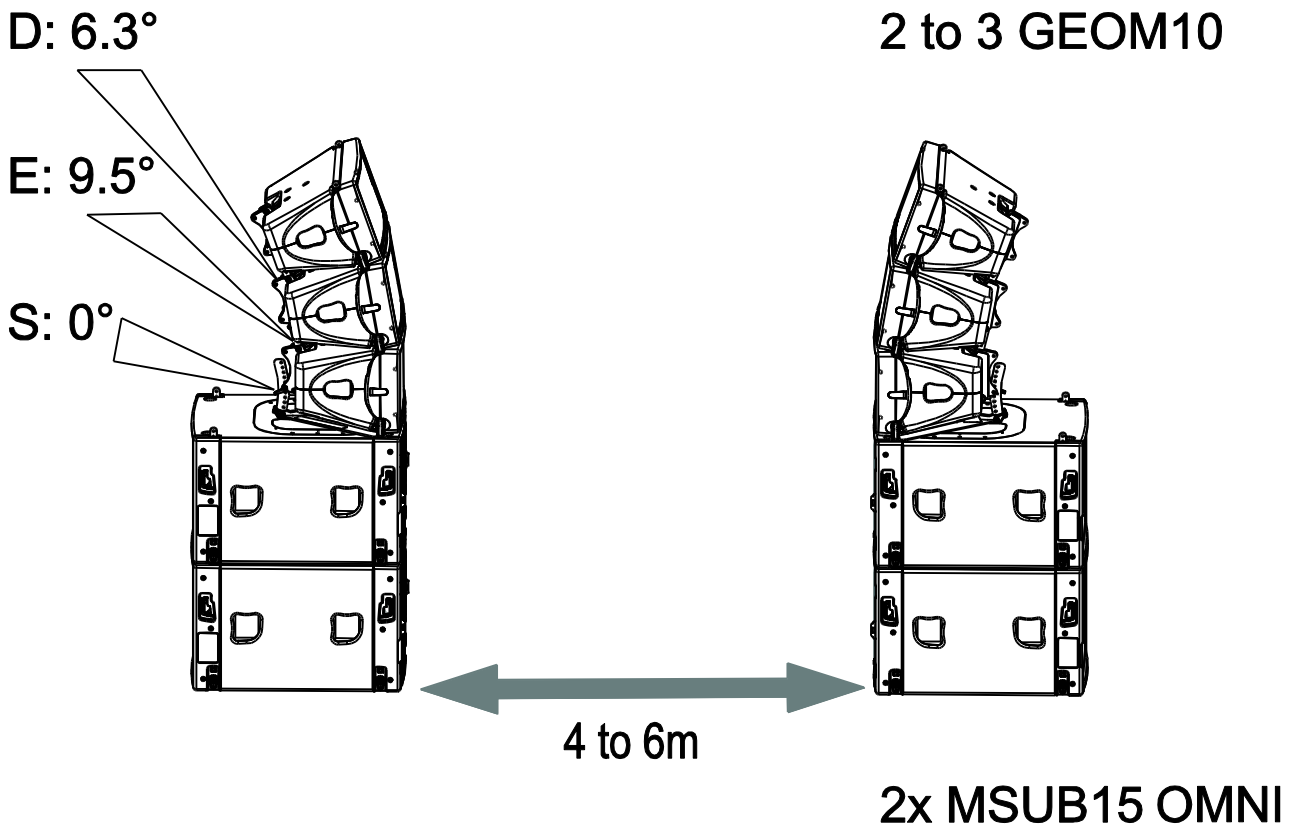

GEOM10 RIGGING

Assembly

Front

Positioning 2x GEOM10-I..

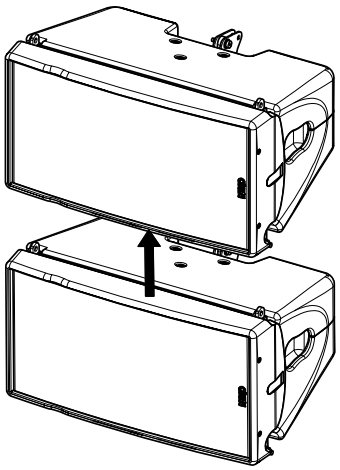

Connect both cabinets by inserting the axis through front holes and secure axis with brake nuts.

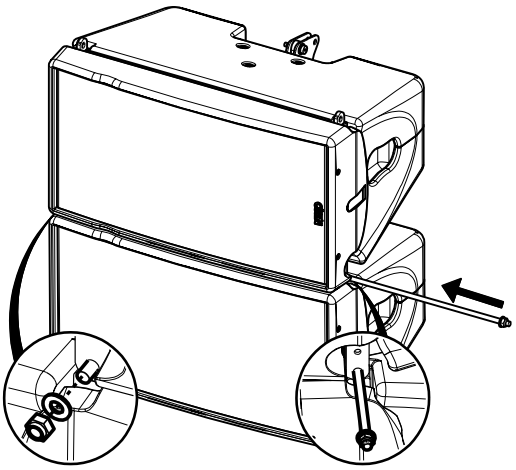

Back

Adjust the appropriate inter-angle value with the Linkbar and secure with the provided screws.
Screws: 1shouder screw (D8x20), 2 washers (M8), 1 brake nut (M6).

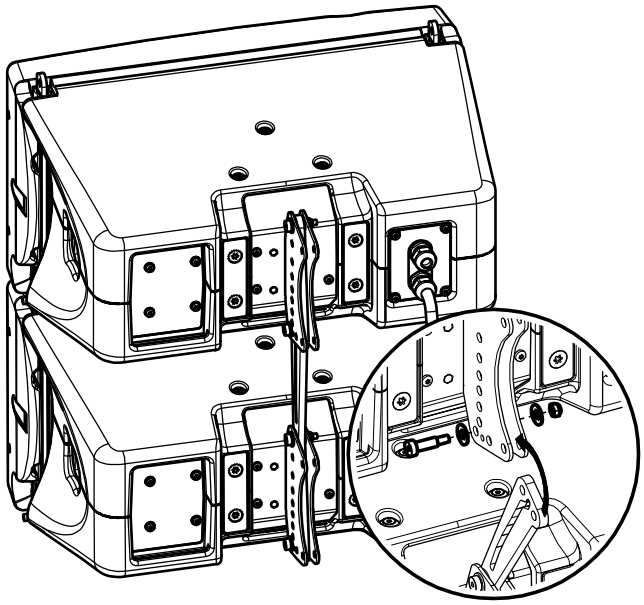

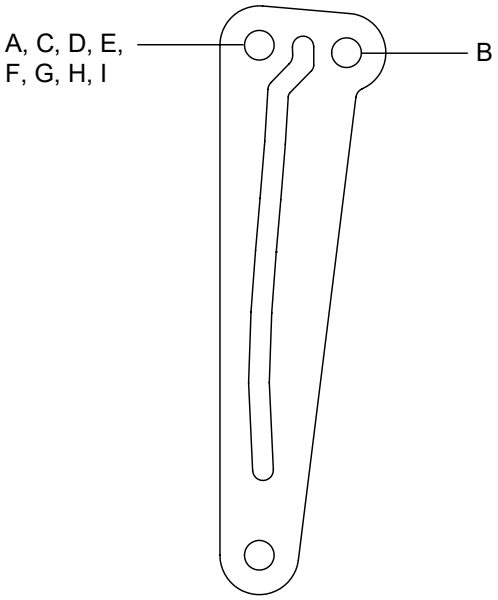

SAFETY: You can replace one of the four screws with an eyebolt (M8) and use a sling (apply thread lock on the eyebolt).

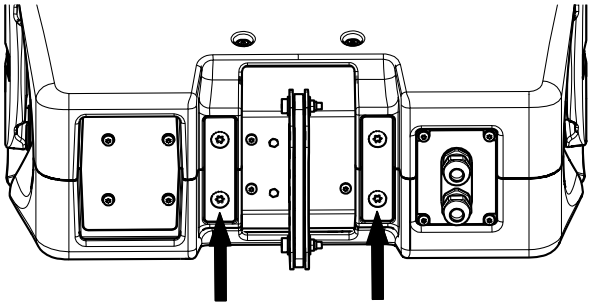

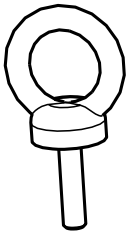

GEOM10 – ACCESSORIES

WARNINGS

All GEOM10 accessories are specifically rated in agreement with structural computations.

Never use other accessories – including push-pins – when assembling GEOM6 cabinets than the ones provided by NEXO: NEXO will decline responsibility over the entire GEOM10 accessory range if any component is purchased from different supplier.

All GEOM10 accessories have been designed so that cabinet are arrayed vertically.

GEOM10 horizontal assemblies as shown in figure below are UNSAFE and STRICTLY PROHIBITED

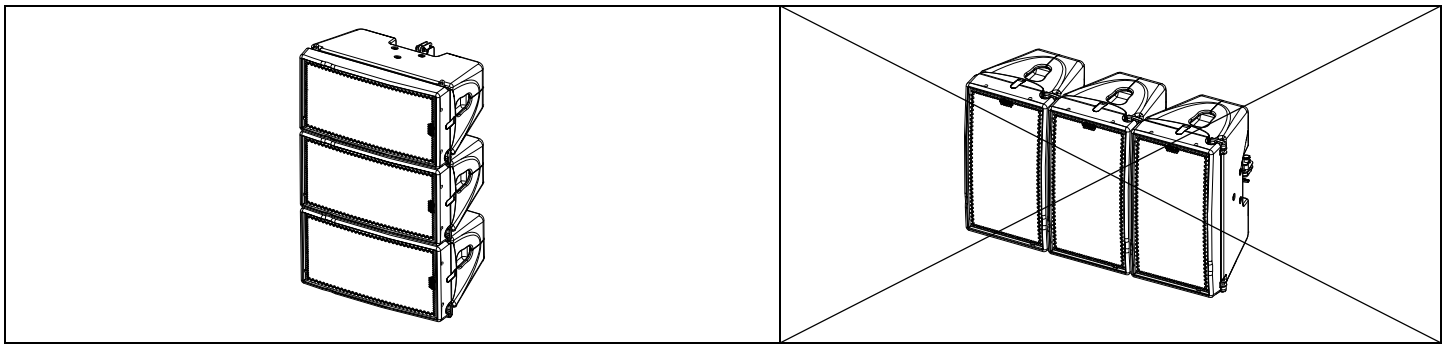

VNI/VNT-BUMPM10

Rated for a maximum of 12 GEOM10 or 8 MSUB15.

Maximum quantity for flown vertical cluster is:
NGEOM10 + 1.5*NMSUB15 <= 12

2 rigging points 2 points with retractable rings.

Usable with VNT-EXBARM10 for a one rigging point.

Ground stack assembly alone, or with VNT-GSTKM10S / VNT-GSTKM10M12S / VNT-GSTKM10L / VNT-GSTKM10M12L.

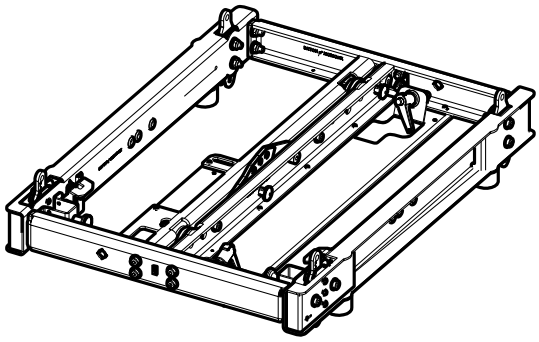

Refer to the Product Data Sheet

VNT-EXBARM10

Extension bar for VNI/VNT-BUMPM10

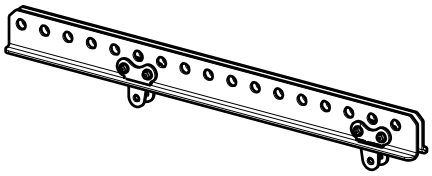

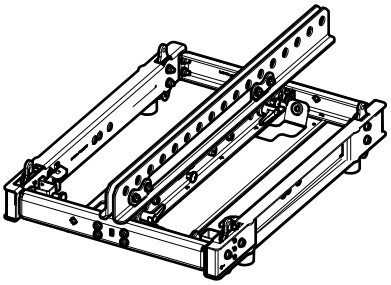

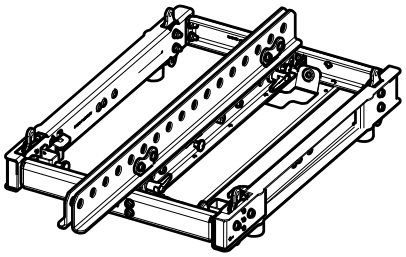

Refer to the Product Data Sheet

VNT-GSTKM10S

VNT-GSTKM10L

Stacking accessories for GEOM10 on VNI/VNT-BUMPM10

Refer to the Product Data Sheet

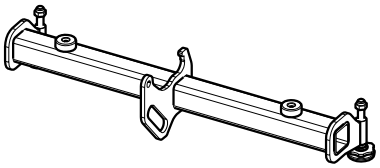

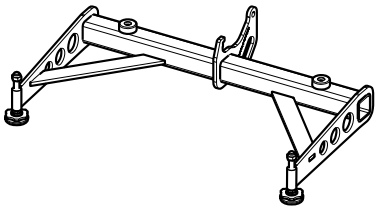

VNT-GSTKM10M12S

VNT-GSTKM10M12L

Stacking accessories for GEOM10/GEOM12 on VNI/VNT-BUMPM10

Refer to the Product Data Sheet

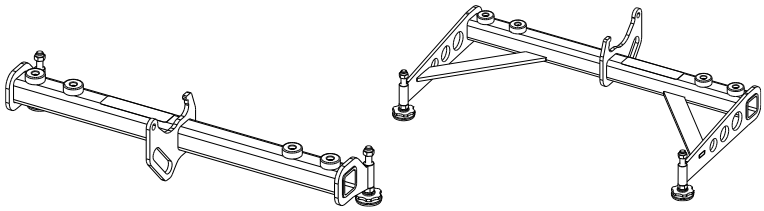

VNT-MNSTKM10

Max 3 GEOM10.

Use for stack on MSUB15.

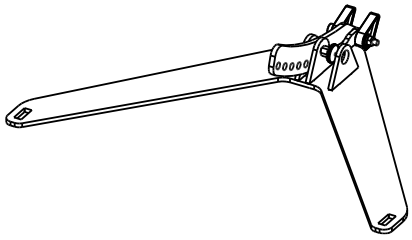

Refer to the Product Data Sheet

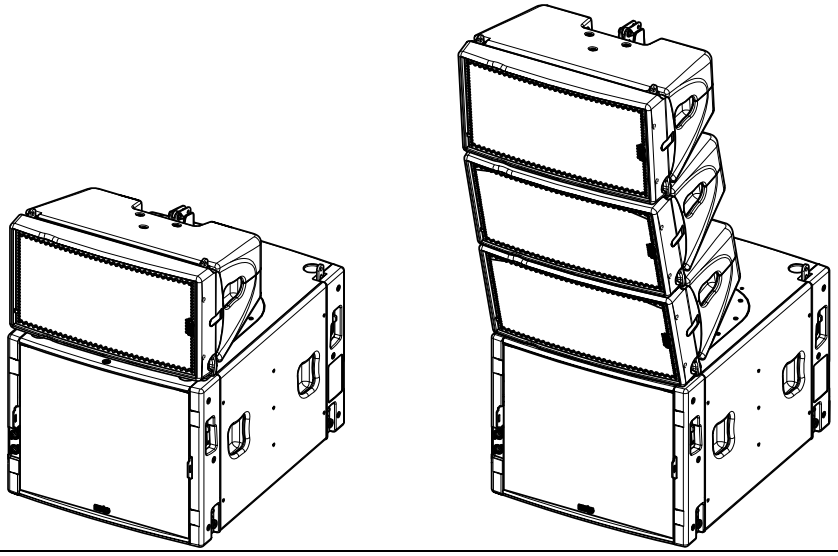

GMT-LBUMP10

Max 12 GEOM10.

Usable with GMT-EXBARM10L for 1 rigging point.

Refer to the Product Data Sheet

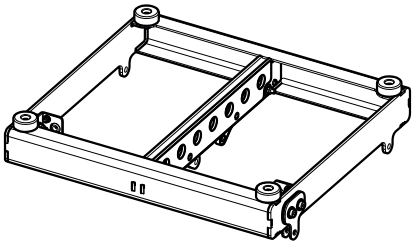

GMT-EXBARM10L

Max 12 GEOM10.

Utilisable avec GMT-LBUMPM10.

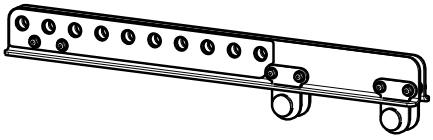

Refer to the Product Data Sheet

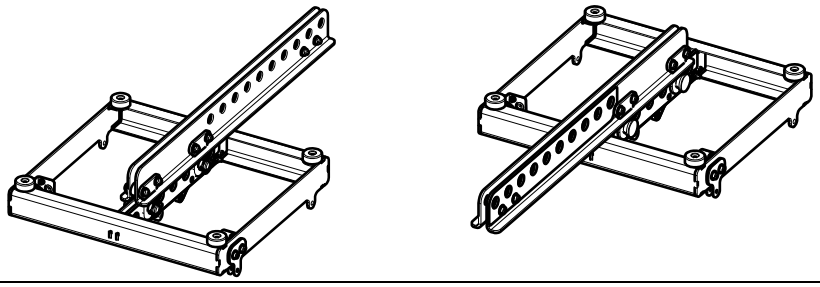

VNT-TCBRK3551

Truss Clamp Rotatif

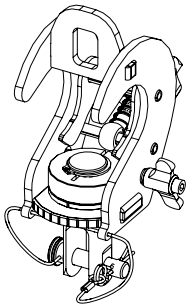

Place VNT-TCBRK3551 on GMT-LBUMPM10, GMT-LBUMPM10 or VNT-EXBARM10 at the desired hole.

Refer to the Product Data Sheet

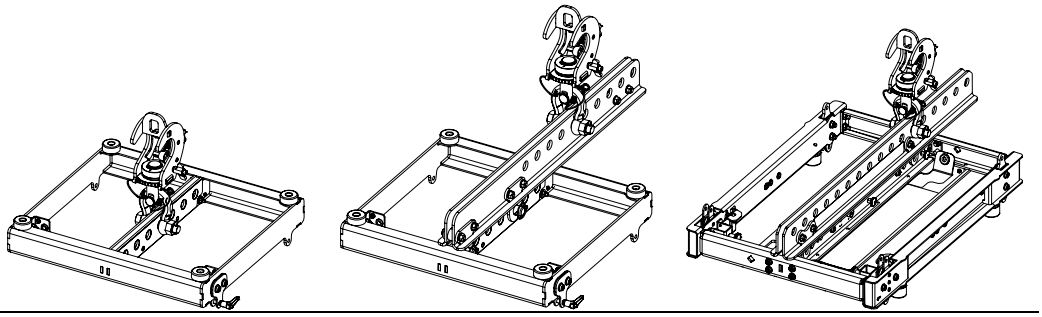

VNI-LNKM61018

Adapter for GEOM10-I below MSUB18-I.

Max 6 GEOM10.

Refer to the Product Data Sheet

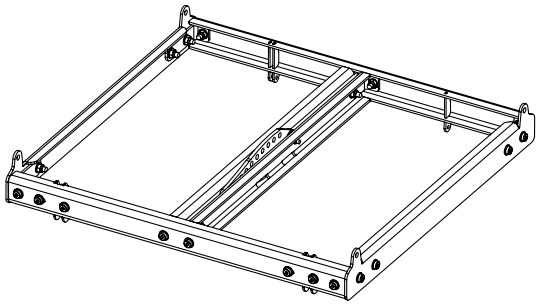

GMT-FLGM10

Pair of flanges for 120°horizontal directivity.

No tools, magnetic clamp.

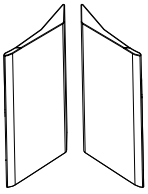

Refer to the Product Data Sheet

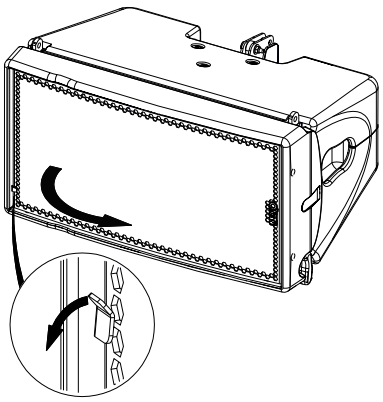

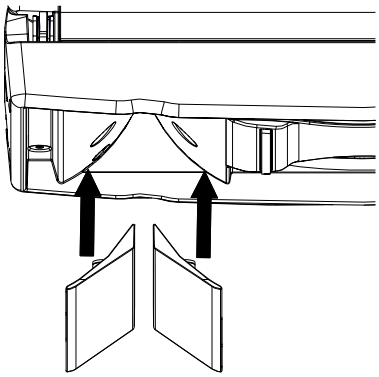

ARRAY EQ

The ArrayEQ allows to adjust the system frequency response in its lower range (see curves below, with different ArrayEq values):

→ GEOM10

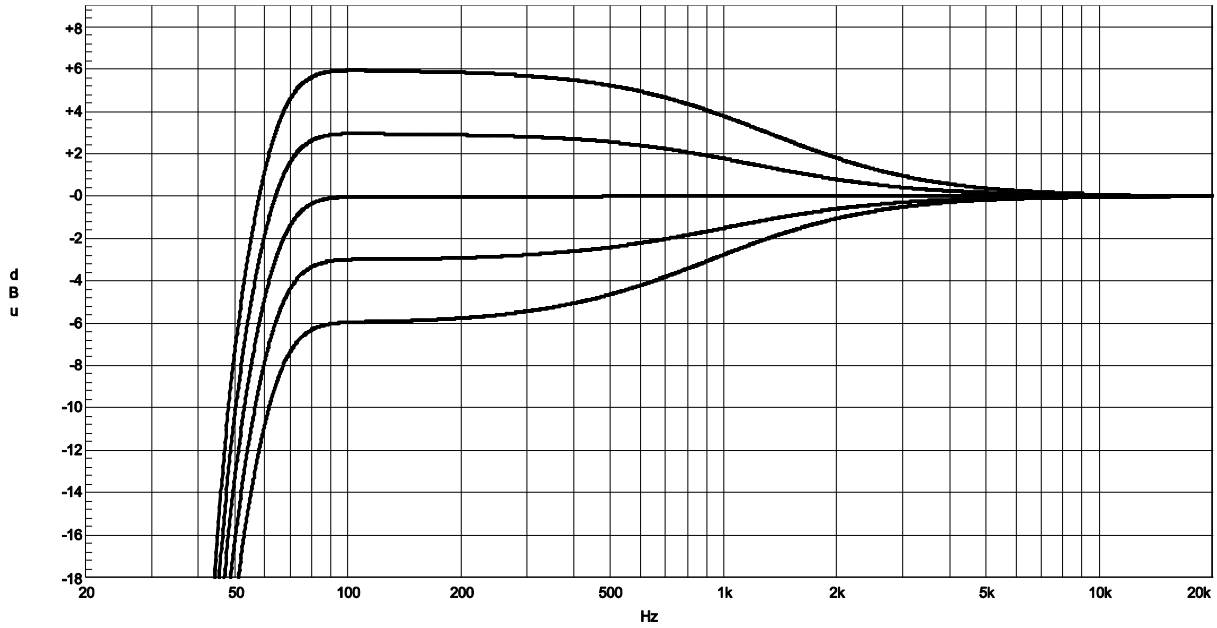

→ GEOM10 STACK MON

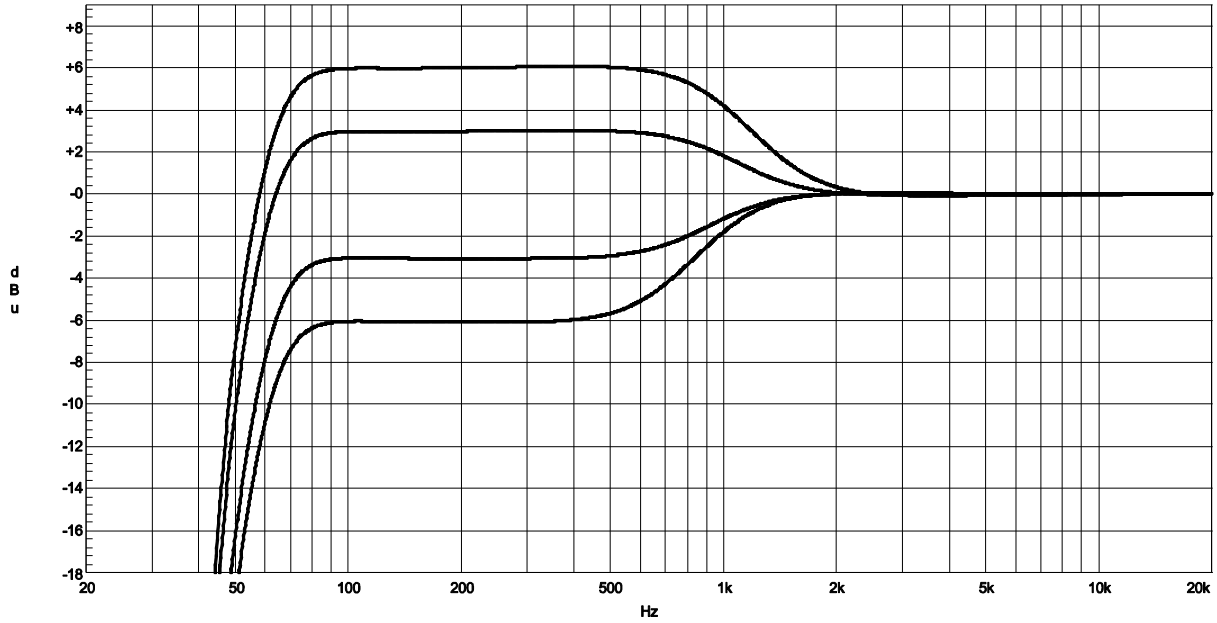

MAINTENANCE

Front panel disassembly

Remove the 4 screws (Tx25) to remove the grille.	Remove the front panel (8 screws Tx25) Tightening torque: 3.5 Nm
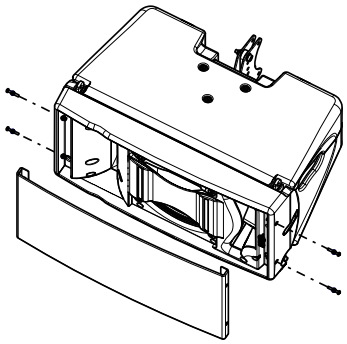	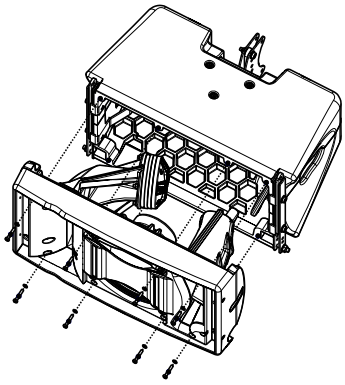
To remove the HF Driver, unscrew the 4 nuts, and remove it from the wave guide.	To remove the 10’’ driver, remove the 4 screws (Tx25). Angle it to get out the driver. Tightening torque for the 10’’: 2Nm
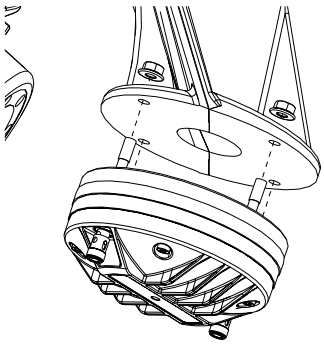	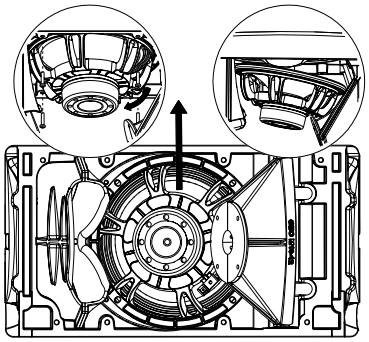

Spare parts

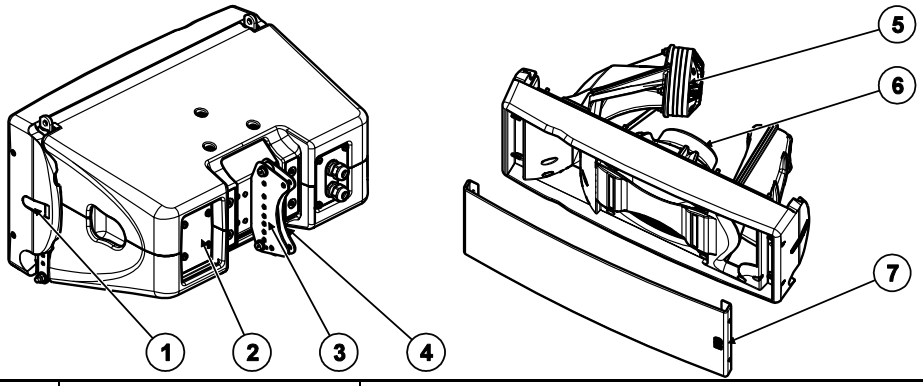

MARK	QUANTITY	REFERENCE	DESIGNATION
1	2	05LEXM1012	Lexan GEOM1012 black
	2	05LEXM1012-PW	Lexan GEOM1012 white
	2	05LEXM1025	Lexan GEOM1025 black
	2	05LEXM1025-PW	Lexan GEOM1025 white
2	1	05LEXWAR	Lexan Warning
3	1	05LEXRIG-EXP	Lexan Rigging Explain
4	1	05LEXRIG-ANG	Lexan Rigging Angles
5	1	05HPADE68-16	HF Driver complete
	1	05NH68-16R/K	HF Diaphragm
6	1	05HPB10N	10'' Driver (with screws)
	1	05HPB10NR/K	Recone Kit HPB10N (with screws)
7	1	05GEOM10UA-I	Complete grille Installation Black
	1	05GEOM10UA-IPW	Complete grille Installation White

NOTE:

Speakers and Grills can be sent back to NEXO for recycling

TECHNICAL SPECIFICATIONS

GEOM10 WITH NEXO ELECTRONICS

Model	GEOM10
Frequency range (±6dB)	59Hz – 20kHz
Sensibility (1W / 1m)	100dB SPL Nominal
Peak SPL Level (1m)	136dB Peak
Operating voltage	30 Vrms (180 Vpeak)
Vertical Dispersion	12° pour GEOM1012 25° pour GEOM1025
Horizontal Dispersion	80° or 120° (with magnetic flanges GMT-FLGM10))
Crossover Frequency	LF-HF : 1.3kHz Passive
Nominal Impedance	8Ω
Recommended Amplification	750 W per cabinet

SPECIFICATIONS

Model	GEOM10-I
Components	LF: 1x 10'' - 8Ω - Long excursion – Neodymium driver with PDD™ HF: 1.4'' throat driver on a BEA/FEA optimized HRW™
Material	Lightweight polyurethane composite
Finish	Black or white structural paint
Front finish	Black or white acoustic fabric fitted front steel grille
Fittings	2 horizontal handles 2 vertical handles Back grip
Connectique	2 x cable gland with 4 cores cables
Weight	21 kg – 46.3 lb
Dimensions	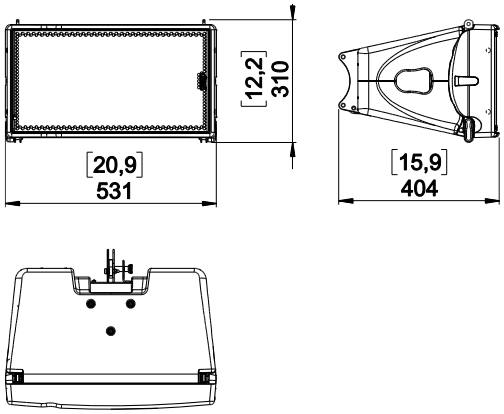

USER NOTES

NEXO S.A.

Parc d'activité de la Dame Jeanne
F-60128 PLAILLY

Tel: +33 3 44 99 00 70
Fax: +33 3 44 99 00 30
E-mail: info@nexo.fr

nexo-sa.com