ANI-EXB01

DP7732 – 01a - DI

α+B218 α+M210 L20

Extension Bar for ANI-LK01/02/03

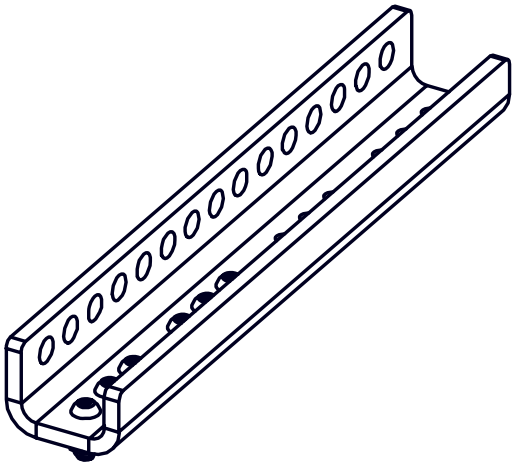

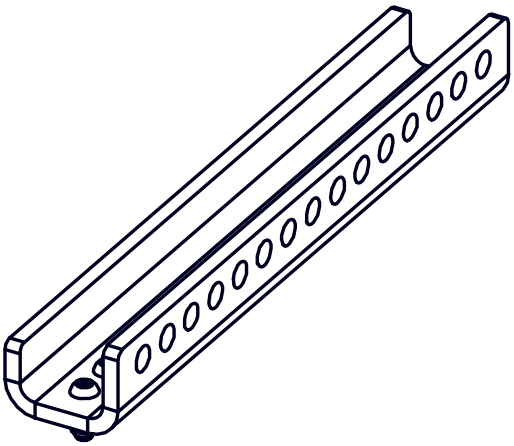

Contents:

X2	X12 M10x30 (a)	X12 M10 (a)	X12 M10 (a)
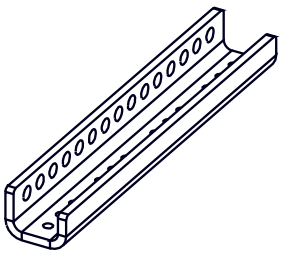	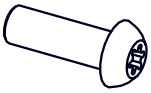		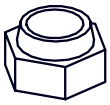

(a): The type of the screws may differ from the representation.

Weight: 10 kg / 22 lb

nexo-sa.com
ZA du Pre de la Dame Jeanne
60128 PLAILLY - France

- Read this document before using.
- Keep this document.
- Observe all warnings and cautions.

TÜVNORD
TÜV NORD CERT GmbH
Baumuster geprüft
tuev-nord.de

WARRANTY 5 YEARS WARRANTY

Size

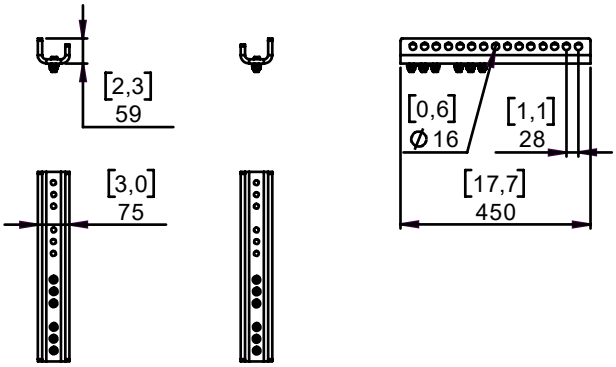

Assembly with ANI-LKxx

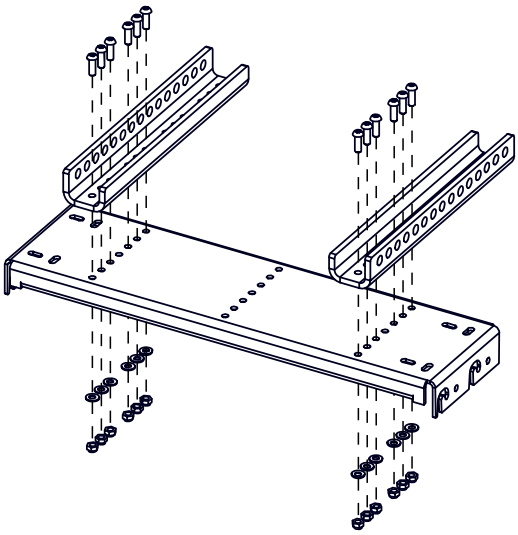

Use

With ANI-LK01	With ANI-LK02	With ANI-LK03
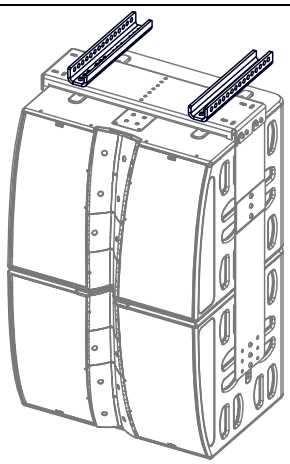	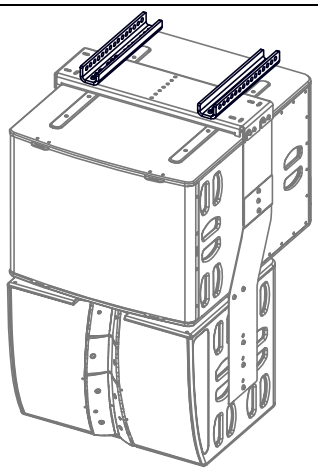	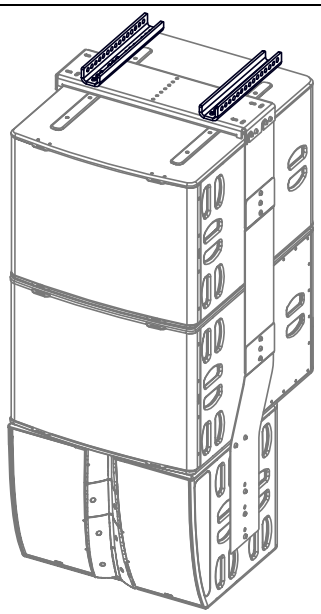
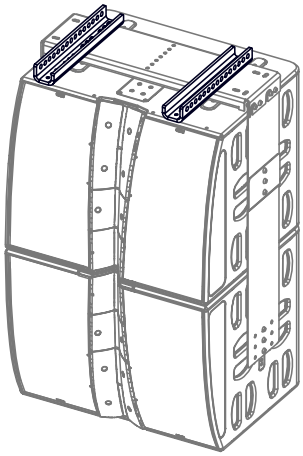	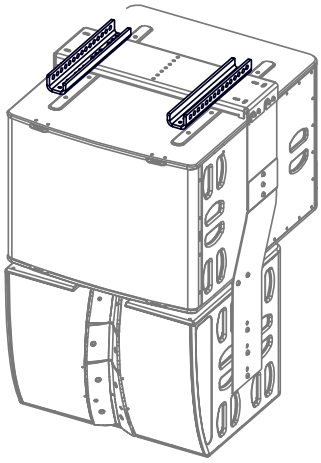	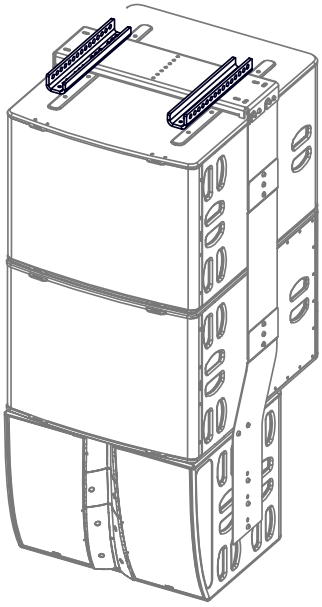

nexo-sa.com
ZA du Pre de la Dame Jeanne
60128 PLAILLY - France

- Read this document before using.
- Keep this document.
- Observe all warnings and cautions.

TÜVNORD
TÜV NORD CERT GmbH
Baumuster geprüft
tuev-nord.de
WARRANTY 5 YEARS WARRANTY

TILT NEG (+/- 1°)

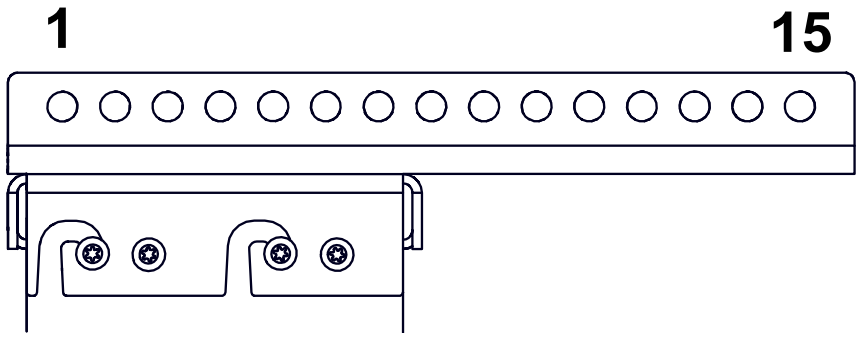

	1	2	3	4	5	6	7	8	9	10	11	12	13	14	15
LK01	**+ 8°**	**+ 6°**	**+ 4°**	**+ 1°**	**- 2°**	**- 5°**	**- 7°**	**- 10°**	**- 13°**	**- 15°**	**- 18°**	**- 20°**	**- 23°**	**- 25°**	**- 27°**
LK02	**+ 8°**	**+ 6°**	**+ 3°**	**0**	**- 3°**	**- 5°**	**- 8°**	**- 11°**	**- 13°**	**- 16°**	**- 18°**	**- 20°**	**- 22°**	**- 25°**	**- 27°**
LK03	**+ 6°**	**+ 4°**	**+ 3°**	**+ 1°**	**0**	**- 2°**	**- 4°**	**- 6°**	**- 8°**	**- 10°**	**- 12°**	**- 13°**	**- 14°**	**- 16°**	**- 18°**

TILT POS (+/- 1°)

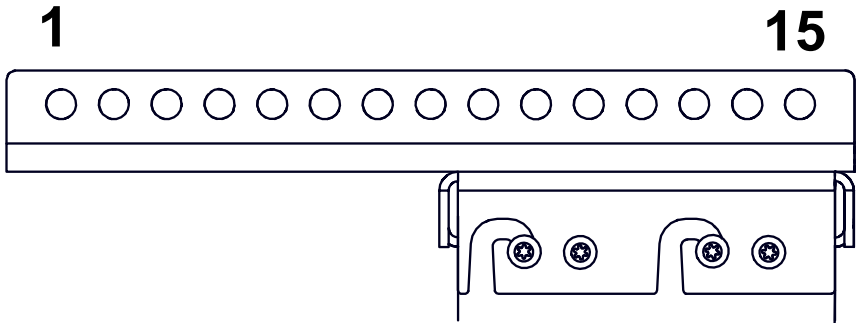

	1	2	3	4	5	6	7	8	9	10	11	12	13	14	15
LK01	**+26°**	**+24°**	**+22°**	**+20°**	**+17°**	**+15°**	**+13°**	**+10°**	**+7°**	**+5°**	**+2°**	**0**	**- 3°**	**- 6°**	**- 8°**
LK02	**+27°**	**+24°**	**+22°**	**+20°**	**+17°**	**+15°**	**+12°**	**+10°**	**+7°**	**+4°**	**+1°**	**- 2°**	**- 4°**	**- 7°**	**- 9°**
LK03	**+18°**	**+16°**	**+15°**	**+13°**	**+11°**	**+10°**	**+8°**	**+6°**	**+5°**	**+3°**	**+1°**	**0**	**- 2°**	**- 4°**	**- 5°**

- **NEXO cannot accept responsibility for accidents caused by any factor other than defects in this product itself.**
- **Please check the web site nexo-sa.com for the latest update.**

nexo-sa.com
ZA du Pre de la Dame Jeanne
60128 PLAILLY - France

- Read this document before using.
- Keep this document.
- Observe all warnings and cautions.